FURUNO

Installation Manual
SSB RADIOTELEPHONE
FS-5070

SAFETY INSTRUCTIONS i

SYSTEM CONFIGURATION ii

EQUIPMENT LIST iii

1. MOUNTING 1-1
   - 1.1 Control Unit 1-1
   - 1.2 Antenna Coupler 1-3
   - 1.3 Transceiver Unit 1-9
   - 1.4 Handset Hanger 1-10
   - 1.5 Antenna 1-10
   - 1.6 Mounting of Optional Equipment 1-11

2. WIRING 2-1
   - 2.1 Wiring 2-1
   - 2.2 External Equipment 2-7
   - 2.3 AC-DC Power Supply Unit PR-850A (Option) 2-11
   - 2.4 Automatic Antenna Switch (Option) 2-13

3. INITIAL SETTING 3-1
   - 3.1 Performance Check 3-1
   - 3.2 Initializaing Control Unit and Transceiver Unit 3-1
   - 3.3 Manual 2182 kHz Tuning Preset 3-3
   - 3.4 System Setup 3-5
   - 3.5 Setting DIP Switches 3-12
   - 3.6 Preamp Setting (For FAX-5) Switches 3-13

4. OPTION KIT 4-1
   - 4.1 Antenna BK Relay 4-1
   - 4.2 DSC Routine Frequency Board 4-3
   - 4.3 Signal Splitter Board 4-4
   - 4.4 Connecting of NBDP Terminal Unit OP05-100 (IB-583) 4-5
   - 4.5 Dummy Load 4-5

PACKING LISTS A-1

OUTLINE DRAWINGS D-1

INTERCONNECTION DIAGRAM S-1

FURUNO ELECTRIC CO., LTD.

www.furuno.co.jp

All brand and product names are trademarks, registered trademarks or service marks of their respective holders.

(Elemental Chlorine Free)

The paper used in this manual
is elemental chlorine free.

FURUNO ELECTRIC CO., LTD.

9-52 Ashihara-cho,
Nishinomiya, 662-8580, JAPAN

Telephone : +81-(0)798-65-2111
Fax : +81-(0)798-65-4200

• FURUNO Authorized Distributor/Dealer

All rights reserved.

Printed in Japan

A : NOV. 2006
G : OCT. 07, 2009

Pub. No. IME-56560-G

(HIMA) FS-5070

* 0 0 0 1 6 0 5 0 3 1 6 *

SAFETY INSTRUCTIONS

DANGER

Do not touch antenna coupler cable or insulator during transmission.

Electrical shock, serious injury or death can result if the cables are touched while the unit is transmitting.

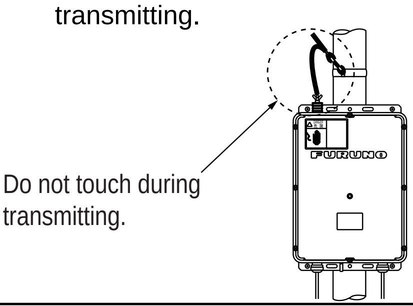

Do not touch the whip antenna or wire antenna.

Electrical shock, serious injury or death can result if the antenna is touched while the unit is transmitting.

WARNING

Do not work inside the equipment unless totally familiar with electrical circuits.

Hazardous voltage which can shock exists inside the equipment.

Turn off the power at the mains switchboard before beginning the installation. Post a sign near the switch to indicate it should not be turned on while the equipment is being installed.

Fire, electrical shock or serious injury can result if the power is left on or is applied while the equipment is being installed.

CAUTION

Confirm that the power supply voltage is compatible with the voltage rating of the equipment.

Connection to the wrong power supply can cause fire or equipment damage to the equipment . The voltage rating appears on the label at the rear of the display unit.

Ground the equipment.

Ungrounded equipment can give off or receive electromagnetic interferenece or cause electrical shock.

Handle copper strap carefully.

An edge of it may harm your hand.

Keep the following compass safe distances.

	Standard compass	Steering compass
Transceiver Unit FS-5070T	2.05 m	1.30 m
FS-2571C	0.90 m	0.60 m
HS-2003	1.50 m	0.95 m
AT-5000	0.35 m	0.30 m
PP-510	1.00 m	0.80 m
IC-302	0.80 m	0.60 m
IC-303	0.80 m	0.60 m
SEM-21Q	2.20 m	1.50 m
IB-583	0.70 m	0.40 m
IF-8500	1.05 m	0.70 m
PR-850A	1.00 m	0.70 m
AS-102	0.65 m	0.40 m

SYSTEM CONFIGURATION

Standard configuration is shown with solid line.

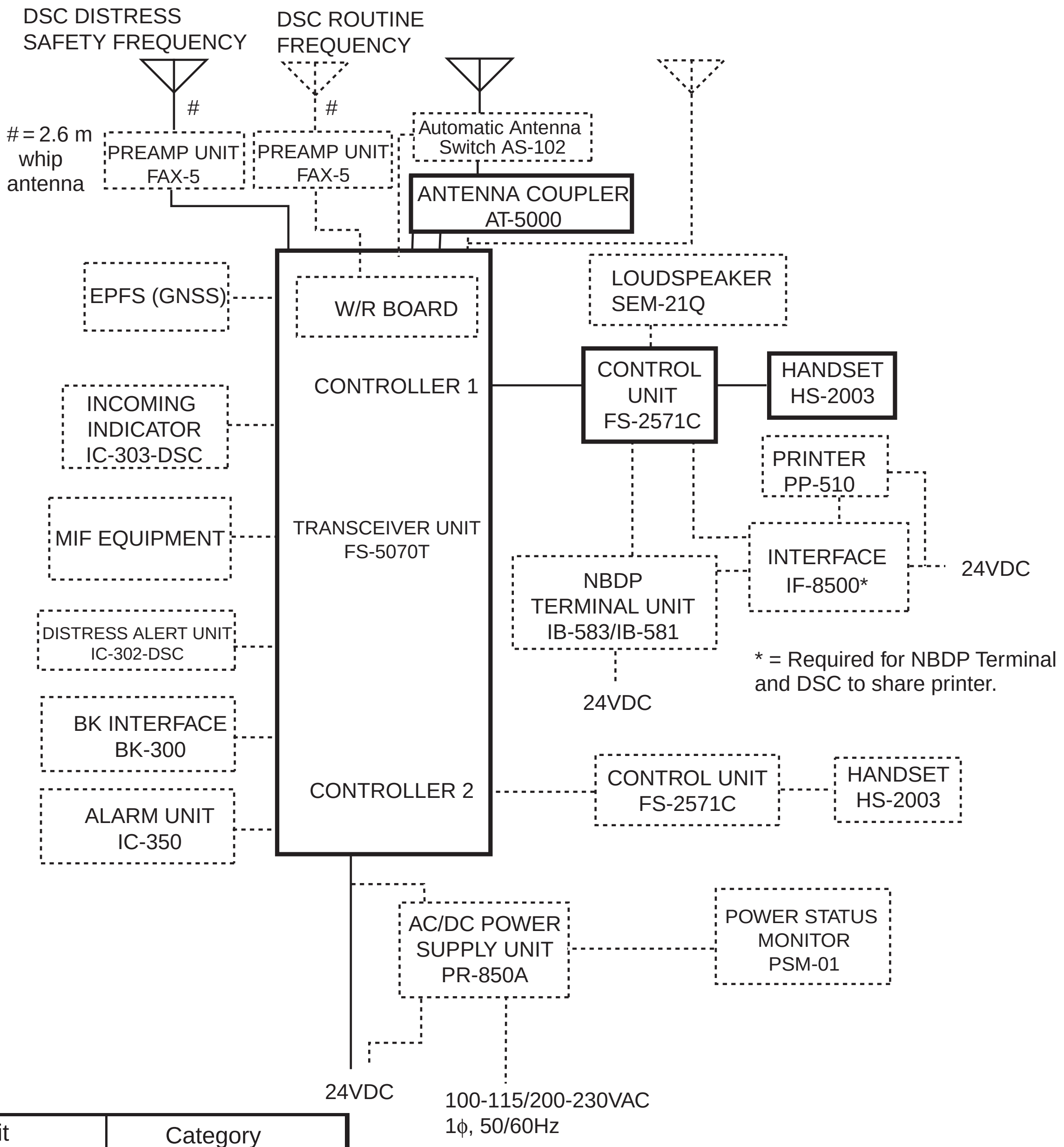

Unit	Category
Preamp Unit	Exposed to weather
Antenna Coupler	Exposed to weather
Other Units	Protected from weather

EQUIPMENT LISTS

Standard Supply

Name	Type	Code no.	Qty	Remarks	
Transceiver unit	FS-5070T	-	1		
Control unit	FS-2571C	-	1		
Antenna coupler	AT-5000-H	-	1	Plastic	
	AT-5000-HS	-		Stainless steel	
Accessories	FP05-05700	000-054-228	1	Handset, bracket and FP05-05511	
Spare parts	SP05-05600	000-057-478	1 set	Handset and SP05-05601	
Installation Materials	CP05-08810	000-056-951	1 set	17JE23150-02 (D8C), 10 m cable	Between control unit & Trans-ceiver unit.
	CP05-08820	000-056-952		17JE23150-02 (D8C), 20 m cable	
	CP05-08830	000-056-953		17JE23150-02 (D8C), 30 m cable	
	CP05-08840	000-056-954		17JE23150-02 (D8C), 40 m cable	
	CP05-08850	000-056-955		17JE23150-02 (D8C), 50 m cable	
	CP05-10901	005-965-770	1 set	For transceiver unit	
	CP05-10300	000-056-987	1 set	17JE23150-02 (D8C) cable (5 m), CP05-8801	
	CP05-10310	000-056-988		CP05-8801	
	CP05-03750	005-925-860	1 set	For AT-5000-H	
	CP05-03751	005-850-570		For AT-5000-HS	
	CP05-10700	000-057-430	1	05S0309, 10 m	For antenna coupler
	CP05-10710	000-057-431		05S0309, 20 m	
	CP05-10720	000-057-432		05S0309, 30 m	
	CP05-10730	000-057-433		05S0309, 40 m	
	CP05-10740	000-057-434		05S0309, 50 m	
	CP05-10800	000-057-435	1	05S0793, 10 m	For antenna coupler (w/armor)
	CP05-10810	000-057-436		05S0793, 20 m	
	CP05-10820	000-057-453		05S0793, 30 m	
	CP05-10830	000-057-454		05S0793, 40 m	
	CP05-10840	000-057-455		05S0793, 50 m	

Optional Equipment

Name	Type	Code no.	Qty	Remarks
Printer	PP-510	-	1 set	w/installation materials (CP16-01200), accessories (FP16-00100)
Printer Interface Kit	IF-8500	000-053-895	1	
Distress Alert Unit	IC-302-DSC	-	1 set	w/Installation materials
Incoming Indicator	IC-303-DSC	-	1 set	w/Installation materials
Whip Antenna	04S4176	000-153-122	1	2.6 meter
	FAW-6RP2	000-572-109	1	6 m, w/standard mounting bracket
	FAW-6D 3-110682-00	000-572-128	1	6 m, w/universal mount
Preamp Unit	FAX-5	000-075-016	1 set	w/cable, 15 m
		000-075-049		w/cable, 1 m
External Loudspeaker	SEM-21Q	000-144-917	1	
Control Unit	FS-2571C-E	-	1 set	
NBDP Terminal Unit Set	OP05-100	000-056-956	1 set	See page 4-5.
Flush Mount Kit	OP05-98	005-951-830	1	For control unit
Cable assy.	17JE23150-02 (D8C) 5 m	000-146-015	1	5 m cable
	17JE23150-02 (D8C) 10 m	000-146-016		10 m cable
	17JE23150-02 (D8C) 20 m	000-146-017		20 m cable
	17JE23150-02 (D8C) 30 m	000-146-018		30 m cable
	17JE23150-02 (D8C) 40 m	000-146-019		40 m cable
	17JE23150-02 (D8C) 50 m	000-146-020		50 m cable
BK Interface	BK-300	000-055-478	1 set	
Antenna Materials	CP05-09010	005-954-180	1 set	10 m
	CP05-09020	005-964-410		25 m
Signal Splitter (RX DIV)	OP05-103	005-965-780	1	See page 4-4.
AC/DC Power Supply Unit	PR-850A	-	1	
Antenna BK relay	OP05-35-H	000-056-878	1	
RX. ANT Matching Box	ARD-1	005-502-230	1	For RX whip antenna

(Continued to next page)

(Continued)

Name	Type	Code no.	Qty	Remarks
R. ANT junction box	AJB1-1A	000-870-284	1	w/installation materials (CP16-01200), accessories (FP16-00100)
Antenna	AT101D/S	000-137-232	1	
	AT130	000-137-233	1	
Freestanding Antenna	AS-9	000-105-818	1	
Antenna Elevating Unit	MT-100	000-137-231	1	
	T-AS-9	000-105-819	1	
Terminal unit	IB-583	000-073-435	1	
Antenna installation materials	E-22	000-050-632	1	
	E-24	000-050-634	1	
	E-25	000-050-635	1	
	E-26	000-050-636	1	
	E-27	000-050-637	1	
5P cable	05S0793	000-125-984	1	10 m, w/armor
		000-125-986		20 m, w/armor
		000-125-987		30 m, w/armor
		000-125-988		40 m, w/armor
		000-125-989		50 m, w/armor
	05S0309	000-106-043	1	10 m
		000-106-044		20 m
		000-106-046		30 m
		000-106-047		40 m
		000-106-048		50 m
Coaxial cable	RG-10/U-Y	000-159-411	1	10 m
		000-159-412		20 m
		000-159-413		30 m
		000-159-414		40 m
		000-159-415		50 m
	RG-8A/U	000-106-052	1	10 m
		000-106-053		20 m
		000-106-054		30 m
		000-106-055		40 m
		000-106-056		50 m
Label for key operations	OP05-101	004-447-470	1	For Russian
W/R2 board kit	OP05-104	001-004-450	1	See page 4-3.
Dummy load	OP05-107	000-011-638	1	For AT-5000-H
	OP05-108	000-011-639		For AT-5000-HS
Cable	05S9509-L500	000-168-955-10	1	For handset extension
Automatic Antenna Switch	AS-102	-	1	

This page intentionally left blank.

1. MOUNTING

1. MOUNTING

1.1 Control Unit

1.1.1 Mounting methods

The control unit can be mounted one of four ways;

- In the hanger (overhead, bulkhead or tabletop)
- Flush mounting.

1.1.2 Mounting considerations

- Make sure the location is strong enough to support the unit under the conditions of continued vibration and shock normally encountered on the boat.
- Locate the unit where it is easily accessible and does not interfere with personnel or operation of other equipment; for example, ship's wheel.

1.1.3 Hanger mounting

1. Fix the hanger with tapping screws (supplied).
2. Set the control unit to the hanger and fix it with the washers and knobs.

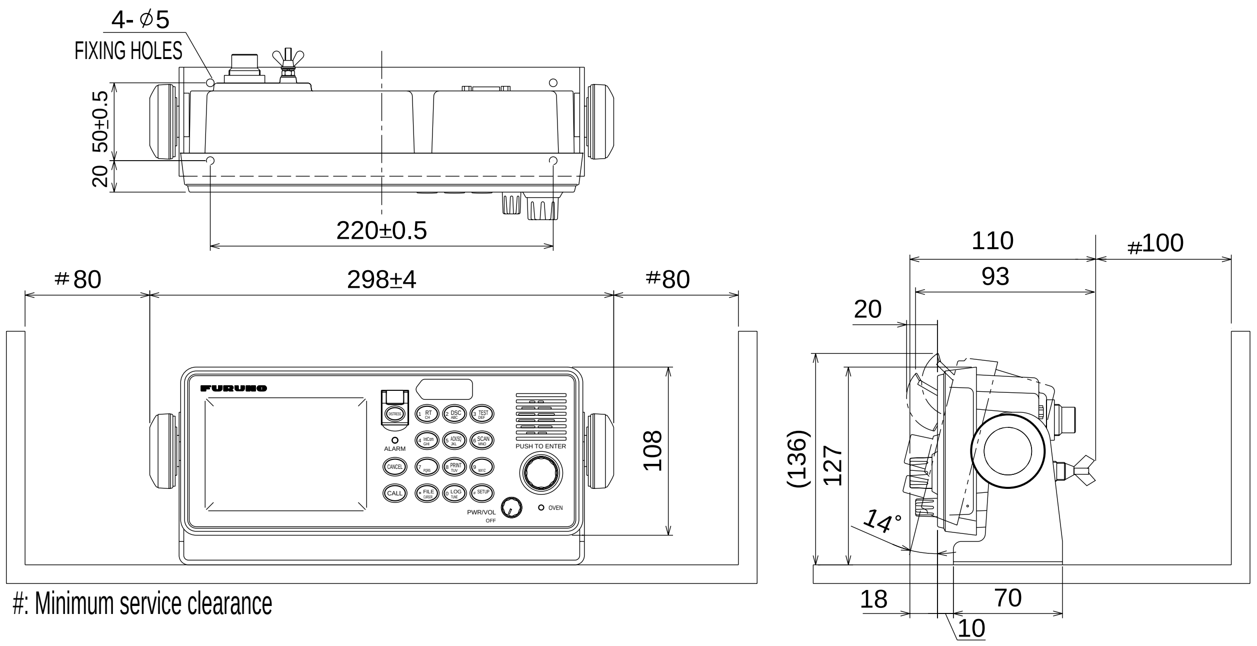

Mounting the control unit

1.1.4 Flush Mounting

Use the optional flush mount kit.

Name: Flush mount kit

Type: OP05-98

Code No.: 005-951-830

Name	Type	Code No.	Qty	Remarks
Mounting metal	05-089-1171	100-299-020	2	
Wing bolt	M4x30	000-804-799	4	
Wing nut	M4	000-863-306	4	
Hex. bolt	M6x12	000-162-897-10	2	
Spring washer	M6	000-158-855-10	2	

1. Make a cutout of 251 mm (W) x 100 mm (H).
2. Insert the control unit to the cutout.
3. Attach two mounting metal (supplied with kit) to the control unit with hex bolts (M6 x 12, supplied with kit) and spring washer (supplied with kit).
4. Screw four wing bolts (supplied with kit) to wing nuts (supplied).
5. Fasten the control unit to the mounting location with four wing bolts and nuts assembled at step 3.

Cutout dimensions

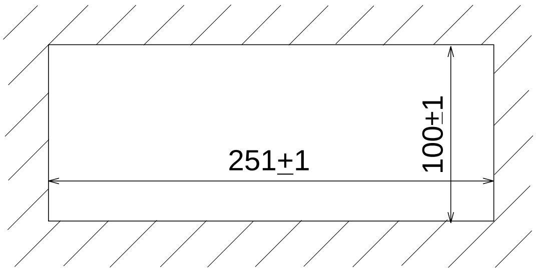

Flush mounting, side view

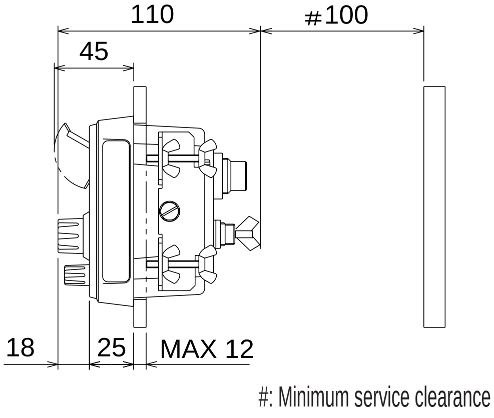

Flush mounting

1.2 Antenna Coupler

⚠ DANGER

ELECTRICAL SHOCK HAZARD

Do not touch antenna coupler cable or insulator. Electric shock, fire, serious injury or death can result if the cables are touched while transmitting.

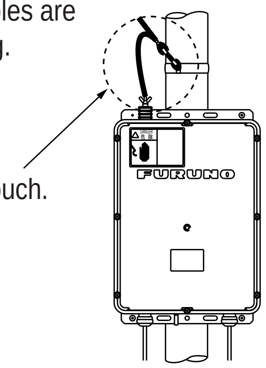

Do not touch.

1.2.1 Introduction

The antenna coupler is installed between the antenna and the transceiver unit, and tunes the antenna to the transmitter.

The importance of grounding cannot be overemphasized. Without a proper grounding, perfect function cannot be expected.

1.2.2 Ground connection

As the ground connection of a transmitter is part of the total antenna system, it is of the utmost importance that the ground connection to the antenna coupler is constructed to have the lowest possible RF-impedance. Losses in the ground connection reduce communication distance.

⚠ CAUTION

Ground the equipment.

Ungrounded equipment can give off or receive electro-magnetic interference or cause electrical shock.

Grounding

For vessels constructed of conducting materials, run a copper strap of least 50 mm width between the ground terminal at the base of the antenna coupler and the ship's superstructure.

For vessels constructed of non-conducting materials, the width of the copper strap should be at least 100 mm.

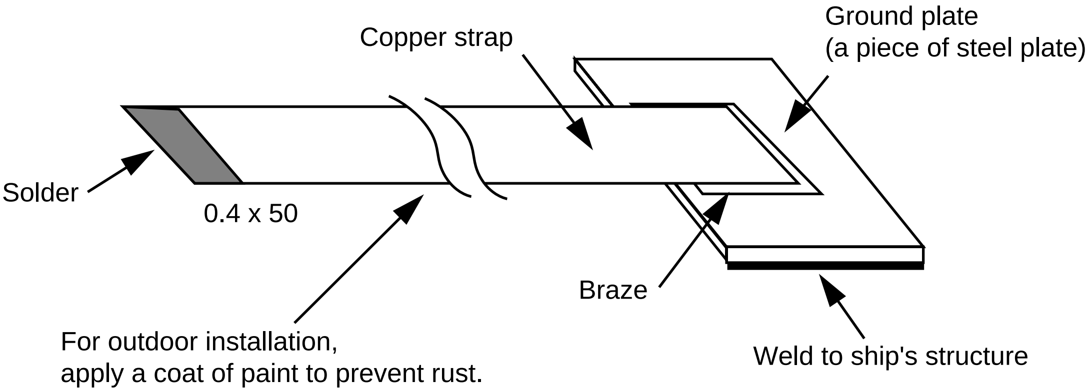

Ground for metallic hull

1.2.3 Mounting considerations

Outdoor installation

- The wire from the coupler to the antenna radiates radio energy. It should be vertical as much as possible and routed away from any grounded.
- For optimum radio energy, locate the coupler as near to the ground as possible.
- The length of the vertical portion of the antenna should be as long as practical.

Indoor Installation

- Locate the unit away from GPS receivers, radio equipment, etc. to avoid mutual interference.
- The lead-in wire should be as near to the unit as possible.
- Select a place where the unit can be easily maintained, but where it will not interfere with crew or passengers.
- Select a location where the earth connection can be made at the front of the unit.

1.2.4 Mounting

Mounting dimensions

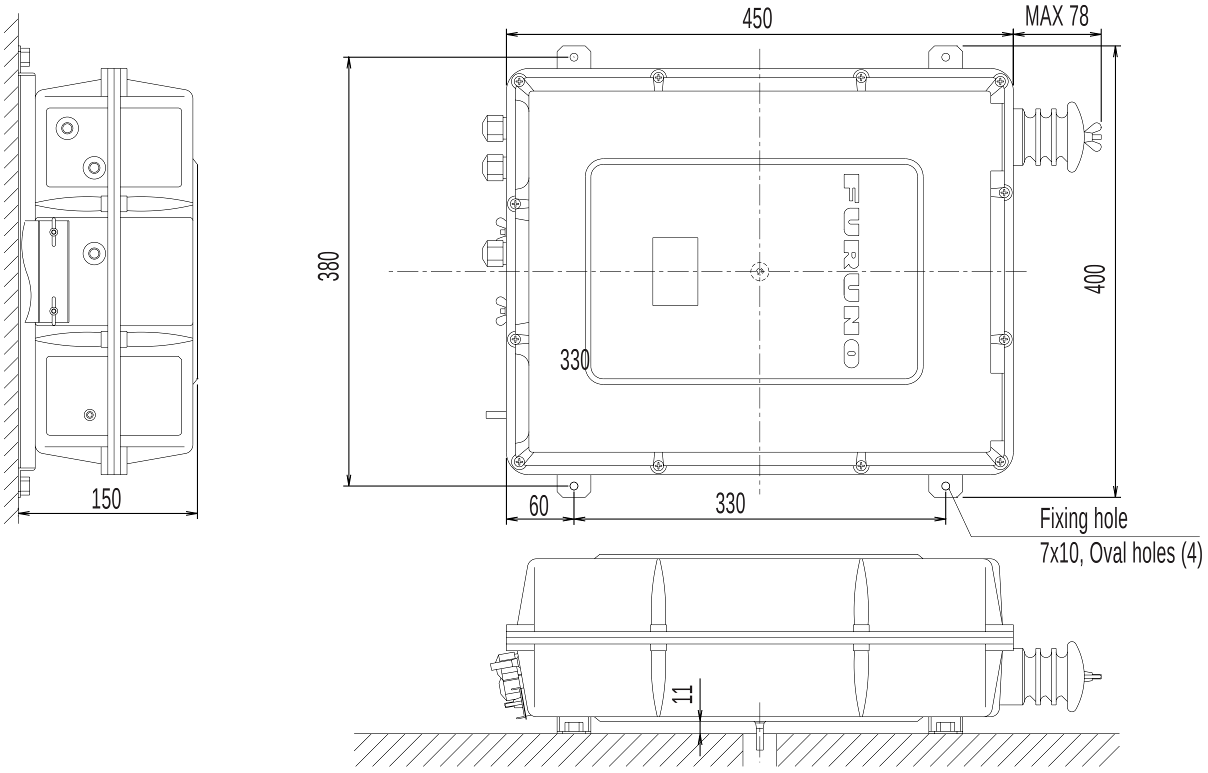

Antenna coupler (AT-5000-H, plastic)

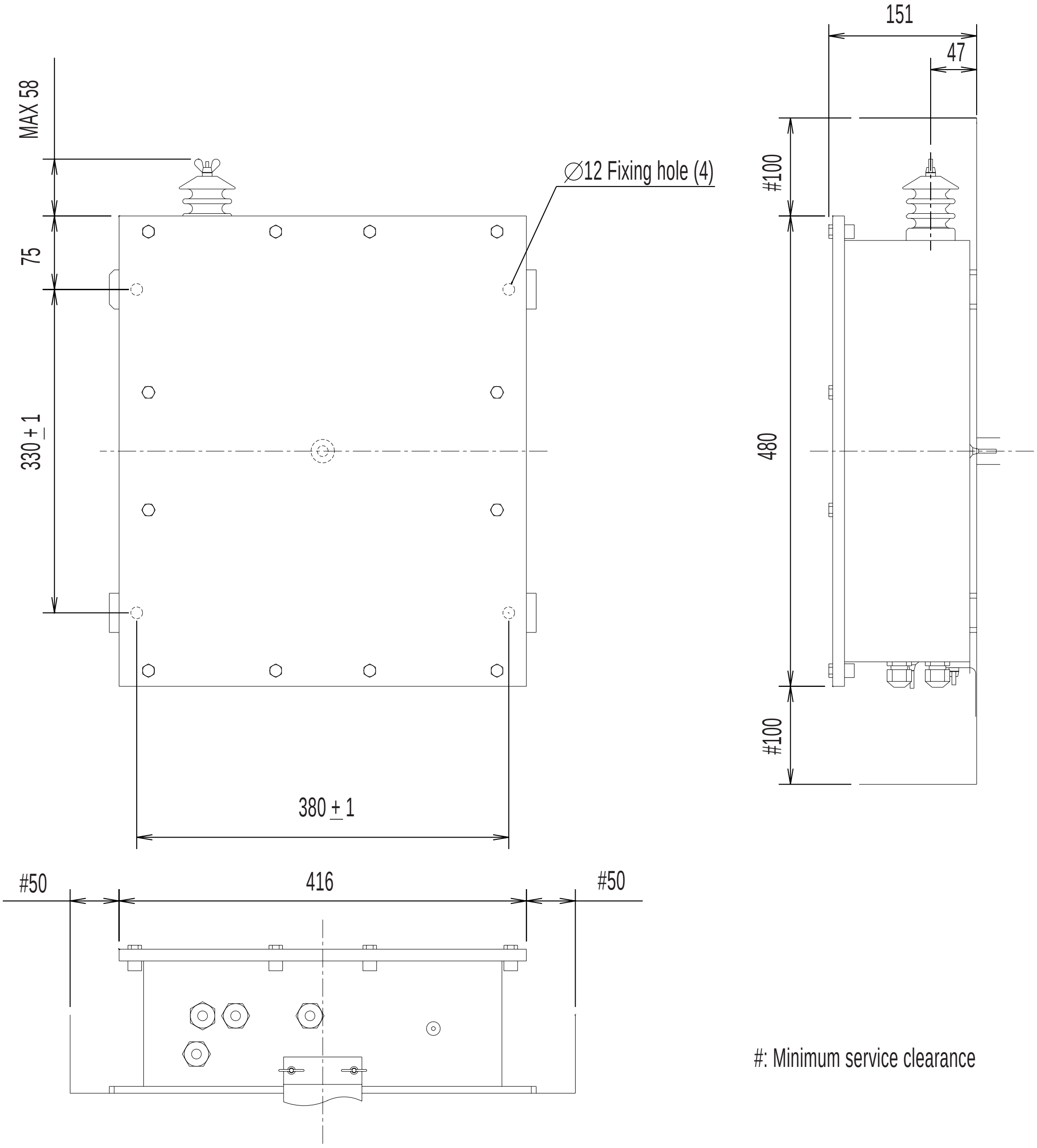

Antenna coupler (AT-5000-HS, stainless steel)

The vent tube (attached) prevents moisture from being drawn into the enclosure during atmospheric pressure changes and allows trapped humid air to escape. Mount it according to coupler installation method, before mounting coupler as follows.

Anti-moisture measure

Ventilation must be provided to prevent moisture from being drawn into the enclosure during atmospheric pressure changes and to allow trapped humid air to escape. Two vent holes are provided on the unit, one at the rear and one at the bottom. A vent tube is mounted at the position (A) shown below. For horizontal installation, remove the vent tube from (A) and fix it to (B). Cover the hole of (A) with the blind seal (supplied), from inside the coupler. For ceiling mount, make a hole (Φ8.5) on the front panel and mount the vent tube. These measures should be done before mounting the unit.

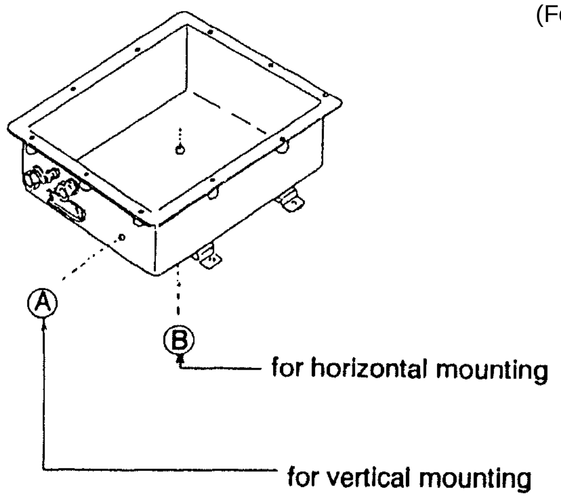

(For horizontal mounting)

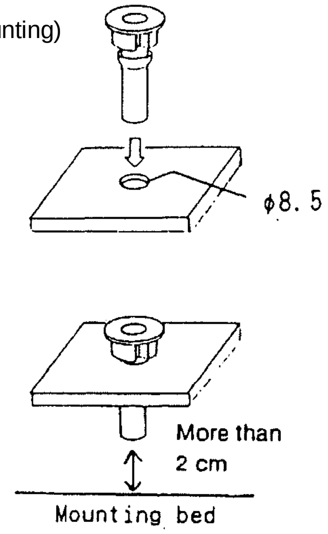

Outdoor installation

Fix the antenna coupler to a bulkhead of the bridge, mast, handrail, etc. For mounting on the mast, select a location which is within the total length of the antenna. Weld suitable mounting fixtures (local supply) to the mast and bolt the coupler there.

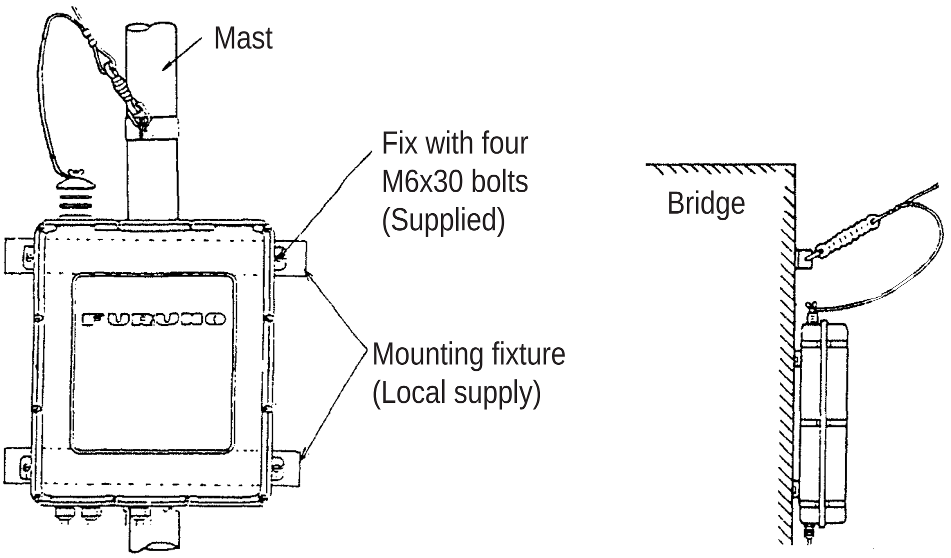

Indoor installation

Fix the antenna coupler to a bulkhead on the bridge, selecting a location where the distance between the lead-in insulator and the coupler is as short as possible.

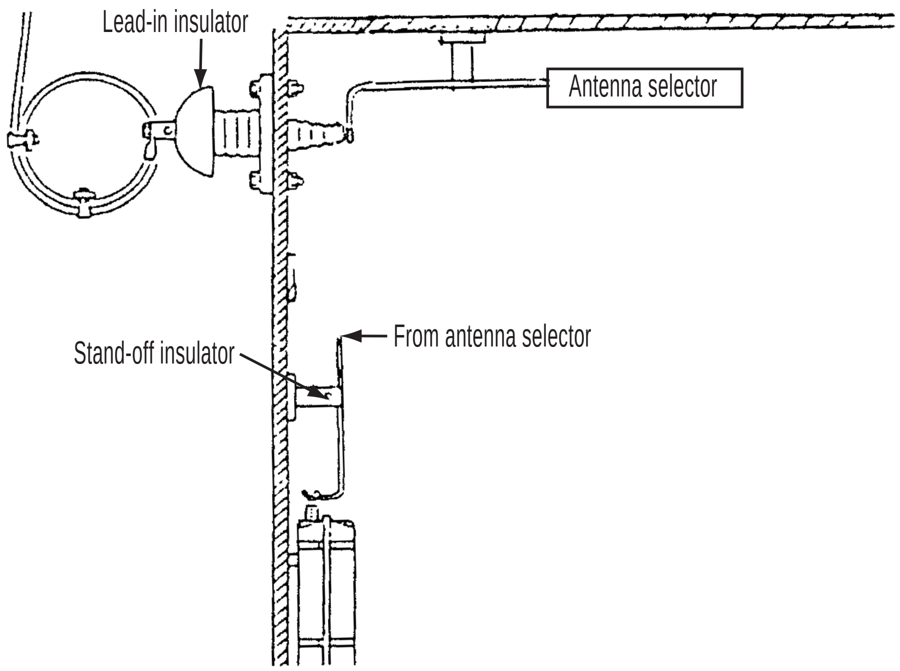

1.3 Transceiver Unit

- Bulkhead mounting only
- Select a location which provides adequate ventilation.
- The location must be clean and dry.
- The mounting location must be able to support the weight of the unit (26 kg) under the continued conditions of vibration normally encountered aboard the vessel. If necessary, reinforce the mounting location.
- Secure the maintenance space shown in the outline drawing at the back of this manual, for ease of maintenance and service.

Fasten the transceiver unit to the mounting location with six tapping screws. For details, refer to outline drawings at the back of this manual.

Note: Lift the cover slightly and then lower it to close the cover of the transceiver unit.

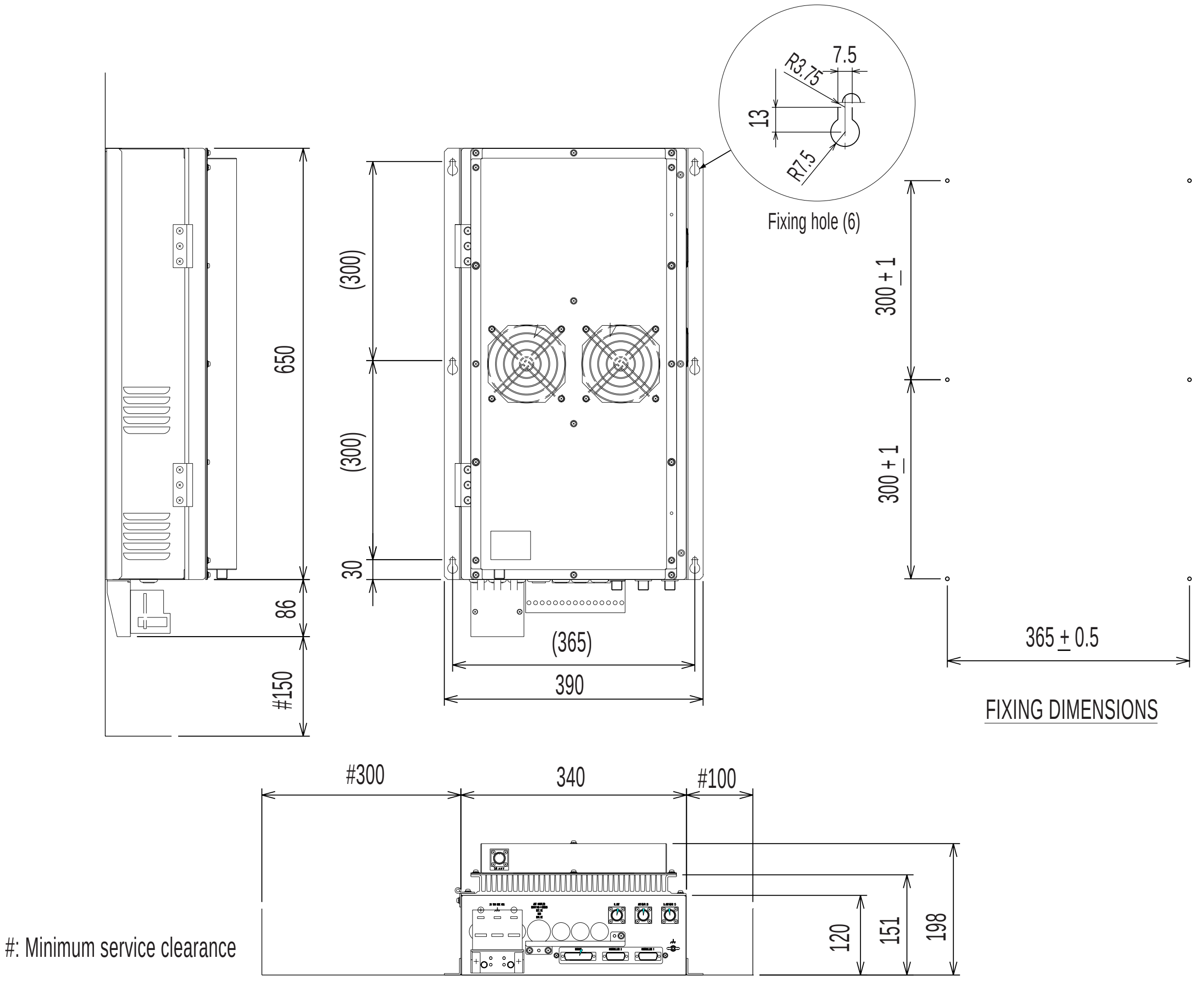

Fixing dimensions for transceiver unit

1.4 Handset Hanger

Unfasten six screws to remove the bracket cover, and fasten the bracket to the mounting location with two tapping screws 4x16 (supplied) on the desktop or bulkhead.

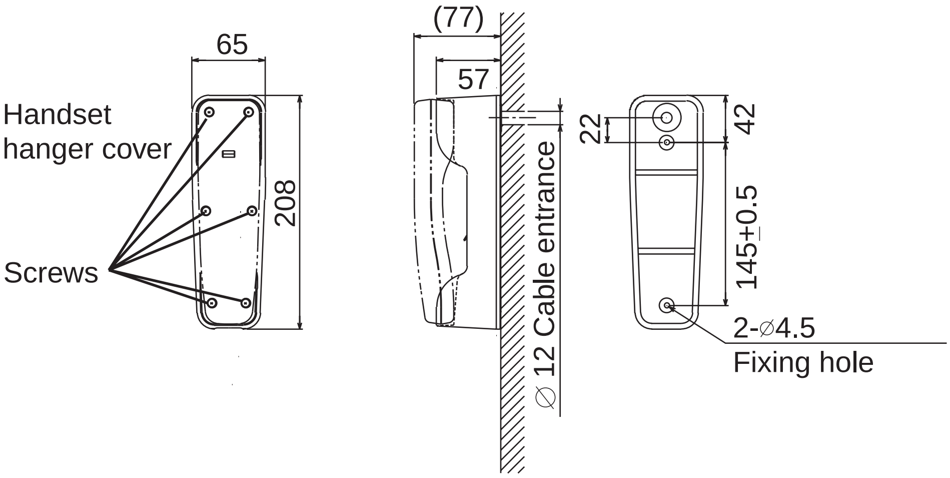

Handset hanger (w/handset)

1.5 Antenna

The antenna plays the most important role in radio communication. If it cannot receive or transmit effectively because of improper installation, even the most sophisticated transceiver will be rendered useless.

1.5.1 Types of antennas

The most commonly used antenna is a long wire or a whip. Whatever antenna is to be used, the antenna coupler can tune a long wire or whip whose total length is 7 to 18 meters (23.3 to 60 feet). Although a longer antenna is preferable when the radio is operated only on low frequencies, use this size of antenna to ensure stable automatic tuning on all bands.

Long wire antenna

A long wire antenna in general provides better performance than a whip antenna, provided the vertical part is long enough.

Whip antenna

It is easy to install and provides good overall coverage of most SSB frequencies. A whip antenna is installed as high as possible, away from any nearby objects.

1.5.2 Mounting considerations

Transmitting antenna

- Total antenna length is 10 to 18 meters.
- The length of the vertical portion should be longer than 4 meters, and the slant angle of that part should be within five degrees.
- Separate the transmitting antenna as far as possible from stays, metallic objects, direction finder antenna and INMARSAT radome antenna.
- Locate the insulator away from funnels, etc.
- If the antenna coupler is installed out of wheelhouse, use a lead-in insulator (FURUNO type: YA-256) to make the connection. If necessary, use a high quality antenna switch and stand-off insulator.
- If the antenna is connected directly to the coupler, use a strain insulator to prevent insulator fatigue.

Receiving antenna

A receiving antenna is required for duplex communication. Furuno can supply two types of receiving antennas: FAW-6RP2 (six meter whip, w/standard mounting bracket), or FAW-6D 3-110682-00 (six meter whip, w/universal mount).

The receiving antenna should be separated at least five meters from the transmitting antenna (as far as possible). Install a receiving antenna junction box at the base of the antenna.

1.6 Mounting of Optional Equipment

Preamp unit FAX-5

The body of preamp unit can be mounted two ways:

1) The bottom of the preamp unit is designed to accept a threaded extension mast of 1 inch diameter. The pitch of the thread should be 14 threads per inch. To prevent undue flexing of the mast in heavy winds, the mast should not be longer than 1.5 m (5 feet).
2) The side of the preamp unit has a molded channel so that it may be mounted directly to a stub mast with two stainless steel hose clamps. Hose clamps must be arranged locally.

Screw the 2.6 m whip antenna (option) tightly onto the preamp unit and waterproof the junction and other exposed metallic parts with sealing compound (silicone rubber, putty, etc.)

Note that a wire antenna of 2 to 3 meters length may be used instead of the whip antenna.

Note: The preamp unit requires 12 VDC power. See paragraph 3.5 for how to provide power to the preamp unit.

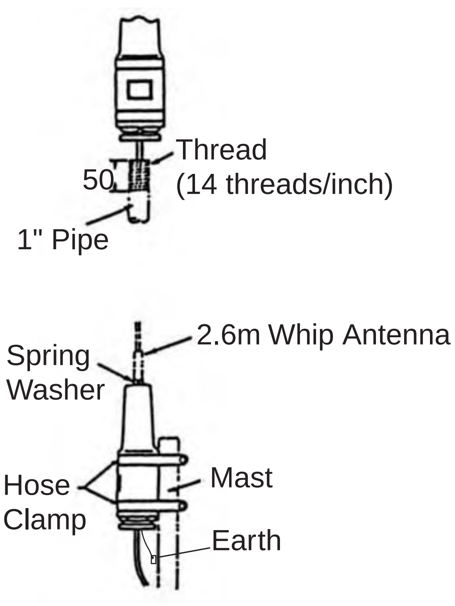

Mounting of preamp unit

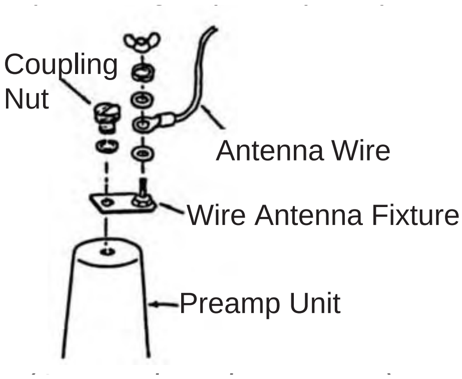

Connecting antenna wire

Printer PP-510

Install the unit with the two mounting fixtures (supplied). Refer to the outline drawing at the end of this manual. Connect the interconnection cable between the printer and the transceiver unit (or printer interface kit IF-8500). For how to load paper and set ribbon cassette, refer to the Operator's Manual of the printer.

Mounting

Fix the printer to the mounting location with two mounting fixtures.

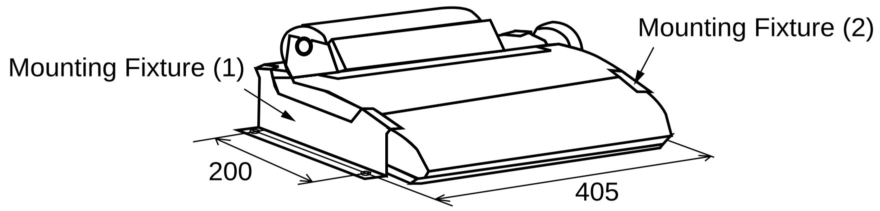

Dimensions of printer PP-510

Printer interface

Referring to the outline drawing at the end of this manual, fix the printer interface with tapping screws (local supply) to tabletop or bulkhead.

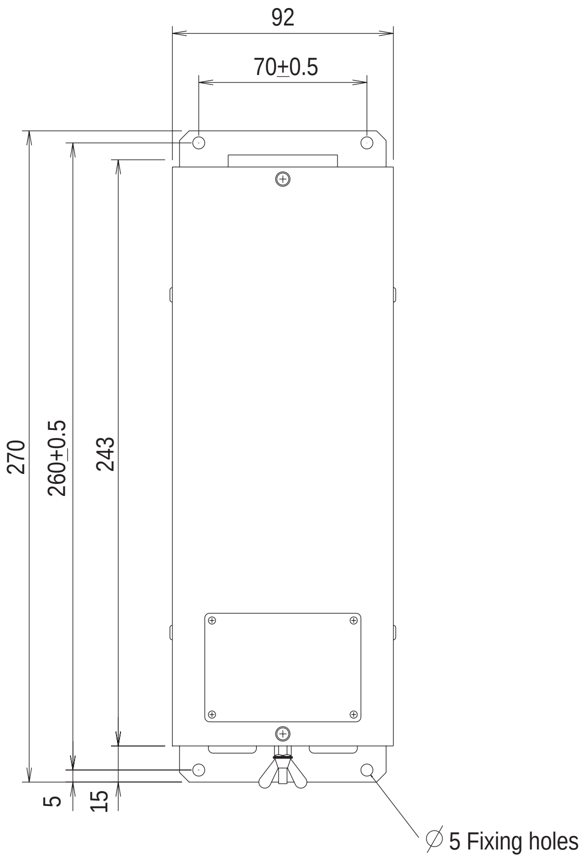

Distress alert unit IC-302-DSC/Incoming indicator IC-303-DSC

Select the mounting location where the button on the unit can be operated easily in an emergency. See the back of the manual for mounting dimensions and recommended clearance space.

1. Unfasten four screws to remove the cover.

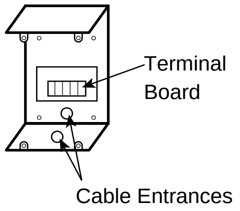

IC-302-DSC/IC-303-DSC

2. Fasten the unit with four tapping screws (3x10, supplied).
3. Pass the cable through appropriate entrance to connect to the terminal board. There are two cable entrances, one at the bottom and one on the back. Select one.
4. Attach the cover with four screws.
5. Clamp the cable outside of the unit with cable clamp (local supply).

External loudspeaker

The external loudspeaker can be installed on a tabletop, the overhead or bulkhead. Fasten the loudspeaker to the mounting location with tapping screws (3.6x16, supplied). For mounting dimensions, see the outline drawing at the back of this manual. The external loudspeaker should be mounted within 2.8 m from the control unit because of the cable length.

AC-DC power supply unit PR-850A

When selecting a mounting location, keep in mind the following points.

- Select a location which provides adequate ventilation.
- The location should be clean and dry.
- The mounting location must be able to support the weight of the unit (35 kg) under the continued conditions of vibration normally encountered abroad the vessel.

Terminal Unit IB-583

Select a mounting location as shown below.

- Leave sufficient space around the unit for operation and maintenance.
- The temperature and humidity of the mounting location should be stable and moderate.
- Keep the unit away from the high power radiotelephone and it's feeder wire so that RFI (Radio Frequency Interference) is minimum.

Mounting of IB-583

1. Fix the hanger by using four tapping screws (supplied).
2. Tighten two knobs to the terminal unit loosely.
3. Mount the terminal unit to the hanger, and then fasten knobs.

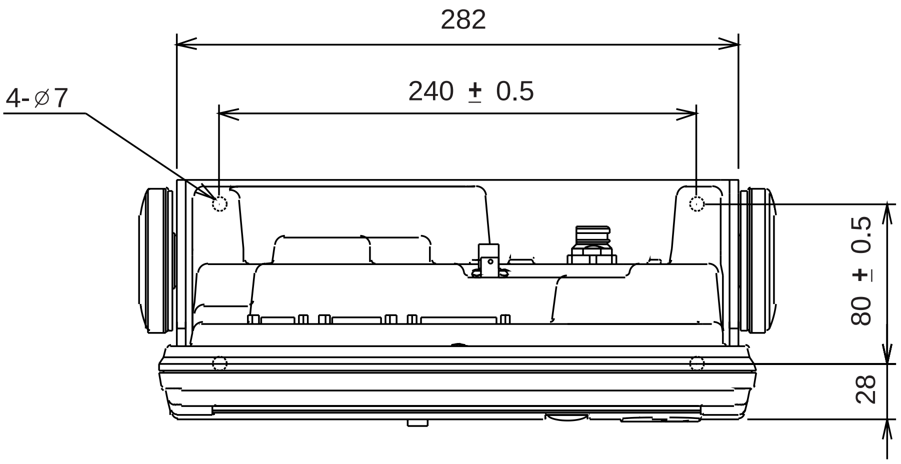

Dimensions of IB-583

Mounting of keyboard

1. Attach the function key label NBDP to the location shown below.

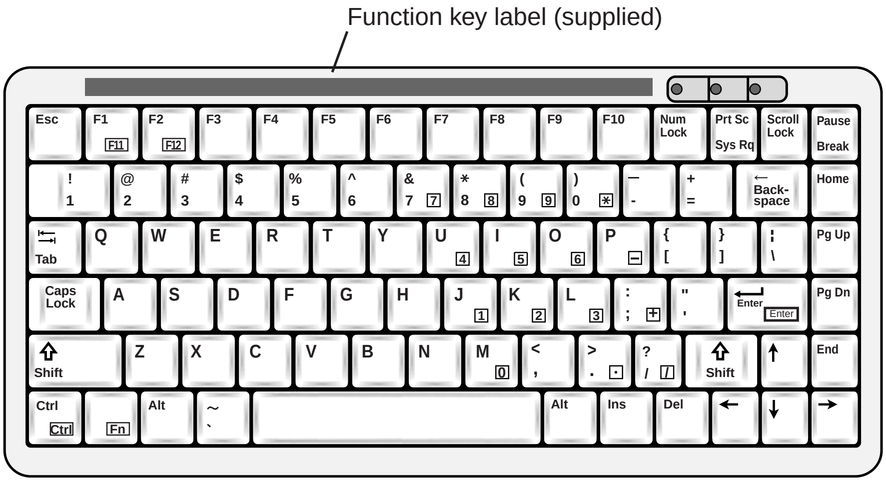

2. Attach four fasteners (small, supplied with the optional kit) to the bottom of the keyboard.
3. Attach four fasteners (large, supplied with the optional kit) to the small fasteners used in step 2.
4. Peel off the paper from four fasteners.
5. Fix the keyboard to the mounting location.

Automatic Antenna Switch

Install the automatic antenna switch between the SSB antenna and the antenna coupler. This unit allows you to connect the antenna to ground remotely when there is a possibility of lightning or the antenna must be grounded to comply with local regulations when returning to a harbor. Mount the unit on the bulkhead by using four self-tapping screws (5x20, supplied).

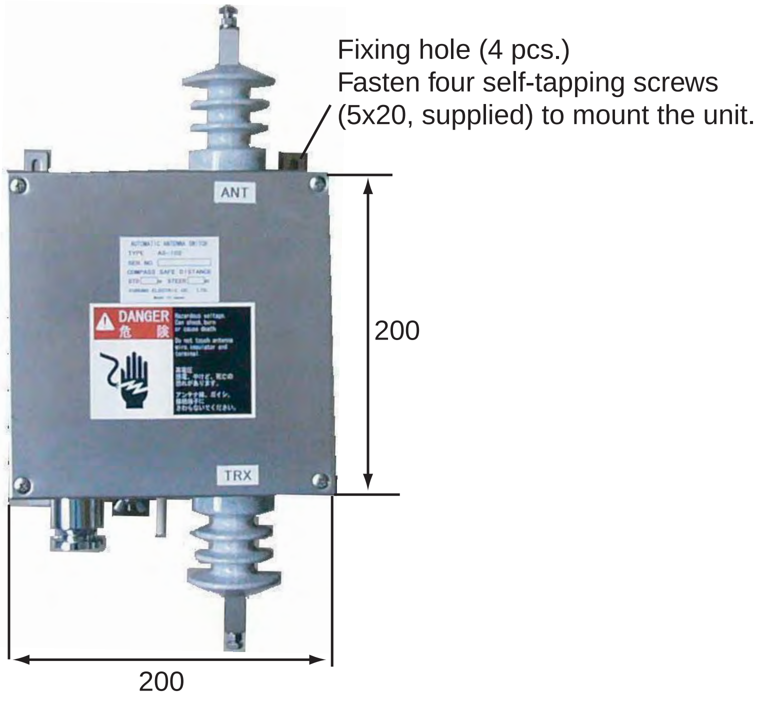

2. WIRING

2.1 Wiring

2.1.1 Standard wiring

For further details, refer to the interconnection diagram at the end of this manual.

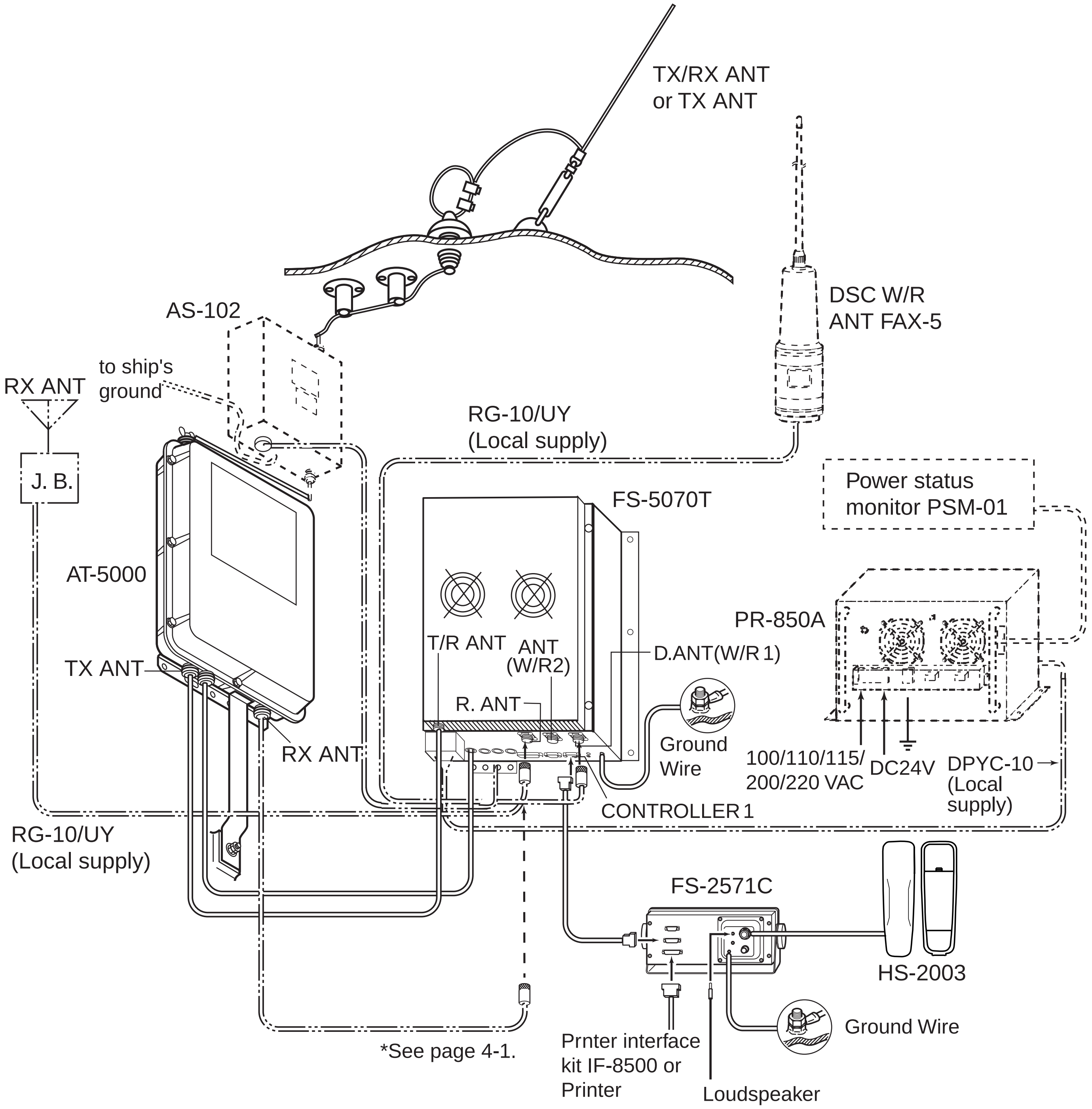

Wiring

2.1.2 Connection on Antenna Coupler

Three cables are terminated at the antenna coupler: the 5P cable (05S0793 or 05S0309) and coaxial cable from the transceiver unit and the antenna wire. For the connection of the antenna wire, use an insulator so as not to put stress on the connector at the insulator of the antenna coupler. For outdoor installation, the use of armored cables is recommended for avoidance of damage of cables as shown on next page. For 05S0793, cut off the armor at the outside of the antenna coupler, and then wrap vinyl tape around the end of armor.

1. Dismount the front cover of the antenna coupler by loosening twelve fixing screws.
2. Connect the coaxial cable to the TB1 (TX ANT terminal) on the coupler board 05P0358, locating the shield inside the cable clamp to ground the cable.

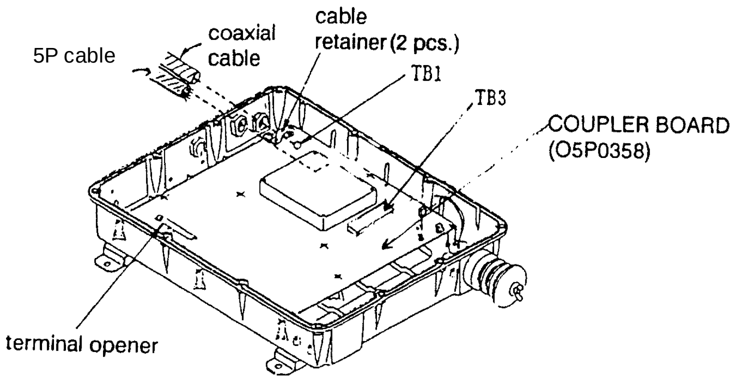

3. Using the terminal opener, connect the 5P cable to TB3.

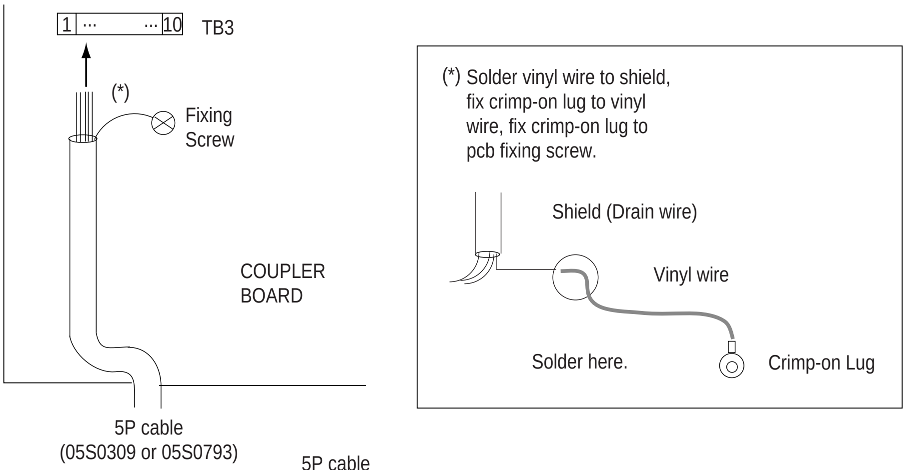

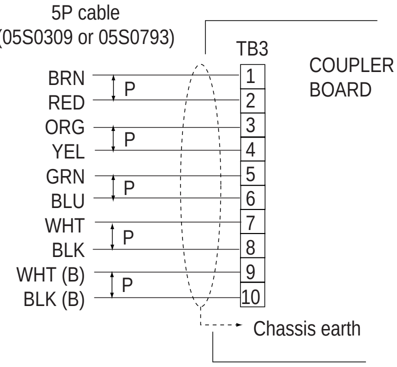

Outdoor wiring of antenna wire

When mounting the antenna coupler outdoors, arrange the antenna wire as shown below to prevent it from loosing. The optional antenna materials shown below are necessary.

Name	Type	Code	Remarks
Antenna materials	CP05-09010*	005-954-180	w/10 m antenna cable
	CP05-09020*	005-964-410	w/25 m antenna cable

*: See lists at the back of this manual.

1. Make a loop (diameter approx. 120 mm) in the antenna cable at the insulator of the antenna coupler.
2. Pass the end of the antenna cable through the hole of the insulator and fasten the bolt.
3. Prepare a piece of antenna wire (approx. 300 mm) and wind it around the insulator one turn.
4. Fasten the above piece of wire and antenna wire together with the wire clips near the ends of the piece of wire.
5. Coat the bolt with silicone sealant.

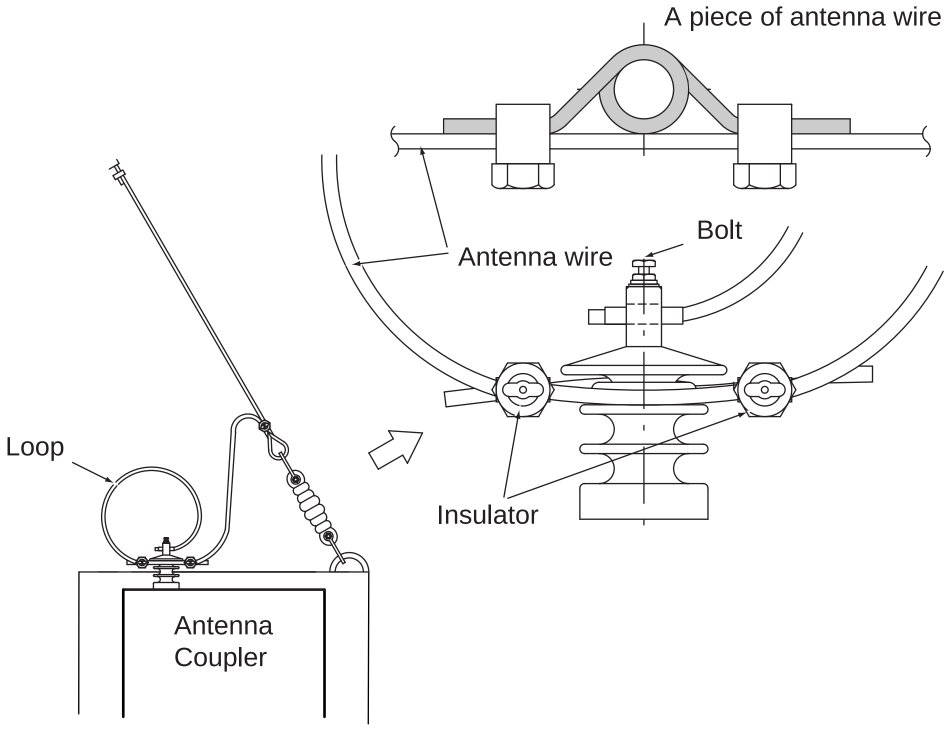

2.1.3 Connection on transceiver unit

Power cable

Connect the DPYC-10 (JIS, Japan Industrial Standard) or equivalent cable (local supply) to the power terminal at the bottom of the transceiver unit, and fasten it to the TB (+) and (-). **The torque should be between 11.5 and 15.5 N·m.**

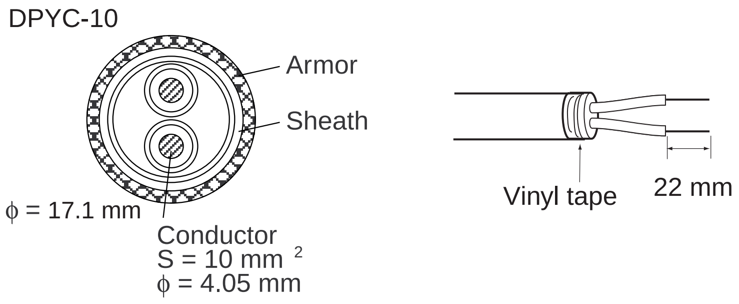

Coaxial cable

Attach the M-type connector of the coaxial cable. Note that when running the coaxial cable, attach it with slack for opening/closing the lid.

The antenna for DSC distress (mandatory) and DSC routine frequency (option) are connected to the transceiver unit with a 50 ohm coaxial cable, type RG-10/UY, RG-8A/U or 3D-2V. Be sure to leave some slack in the cable for future service and maintenance. Lay the coaxial cable and attach an M-type plug to the cable as follows.

1. Remove the sheath by 30 mm.
2. Bare 23 mm of the center conductor. Trim braided shield by 5 mm and tin.
3. Slide coupling ring onto cable.
4. Screw the plug assembly on the cable.
5. Solder plug assembly to braided shield through solder holes. Solder contact sleeve to conductor.
6. Screw coupling ring into plug assembly.
7. Screw the plug into the D. ANT (W/R 1) port for DSC distress and ANT (W/R 2) port for DSC routine frequency (option) at the bottom of the transceiver unit.

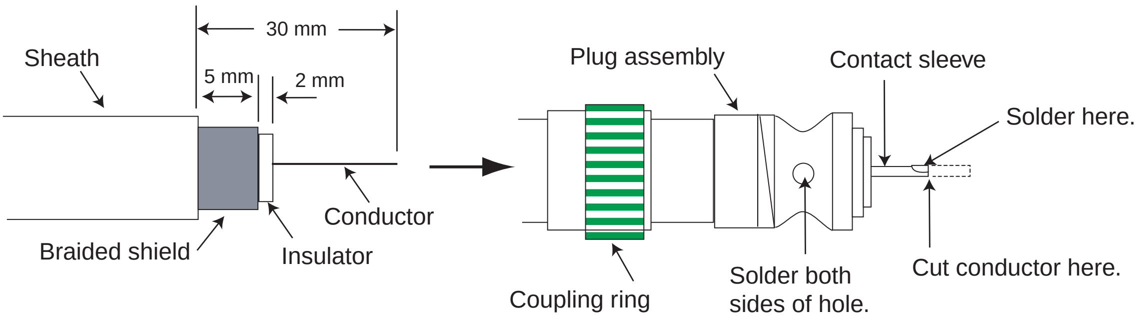

5P cables

1. Use a knife to cut intersecting slits in the rubber bushing.
2. Fabricate the cable (05S0309 or 05S0793) as shown below.

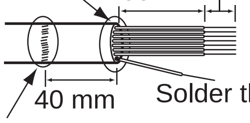

3. Wrap vinyl tape or attach an insulating tube to the end of the vinyl sheath to prevent the shorting to the board.
4. Pass the 5P cable to the rubber bush, and then connect the cable to #1 to 10 on the TB Board (05P0758).

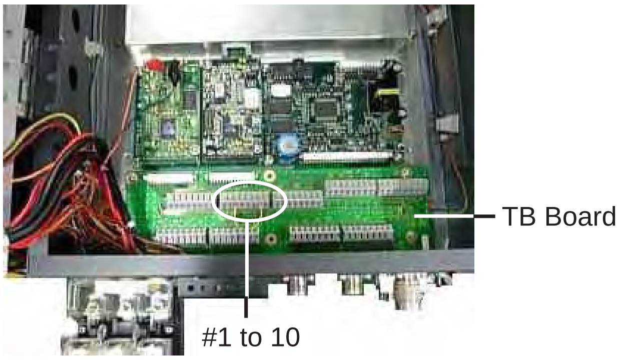

Transceiver unit, inside view

5. Fasten the 5P cable to the fixing plate with a cable tie (local supply.)

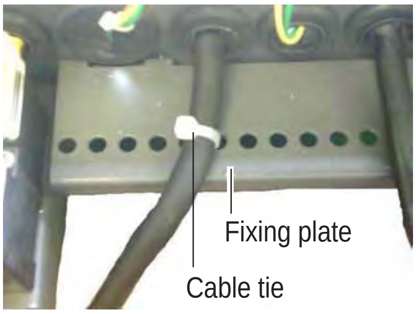

Fixing plate (exploded view of transceiver unit)

How to connect cable to the terminal board

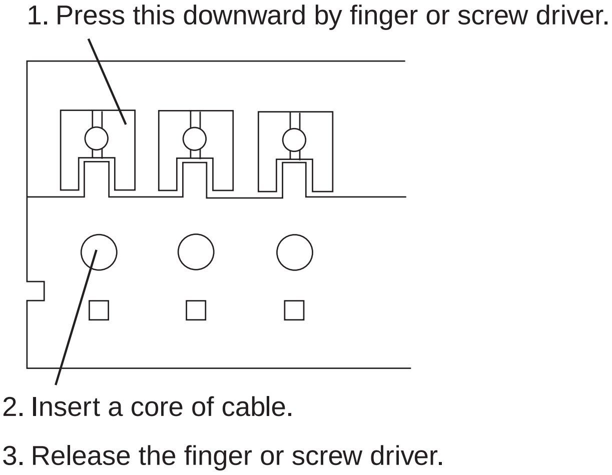

Control unit

Connect the transceiver unit and the control unit by the supplied cable with D-sub 15 pin connector for both ends. A control unit should be connected to the CONTROLLER 1 port. When connecting two control units, the CONTROLLER 1 port has priority.
Connect the handset HS-2003 to the HANDSET 1 port at the rear of the control unit. For other handset or microphone, connect to the HANDSET2/MIC port. Note that these two ports cannot be used at the same time.

2.2 External Equipment

Cables for the external equipment are connected to the TB Board (05P0758) in the transceiver unit and ports on the control unit Note that these cables should be fixed to the cable board at the entrance of cables with cable ties.

Transceiver unit, inside view

Equipment with IEC 61162-1 (NMEA) format

Connects a navigator to the terminal board in the transceiver unit. The FS-5070 can receive the following sentences in IEC-61162-1 (ed.2nd) format. Use the interconnection cable type TTYCS-1 (Japan Industrial Standard type, or equivalent) or CO-SPEVV-SB-C 0.2x2P.

- GLL: Latitude and longitude
- RMC: GPS generic navigation information
- GGA: GPS position, UTC
- ZDA: UTC, day, month, and year
- RMA: Minimum Loran-C data

TTYCS-1 (Twisted pair cable)

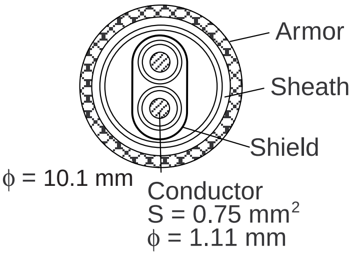

Priority: GGA>RMC>GLL>RMA

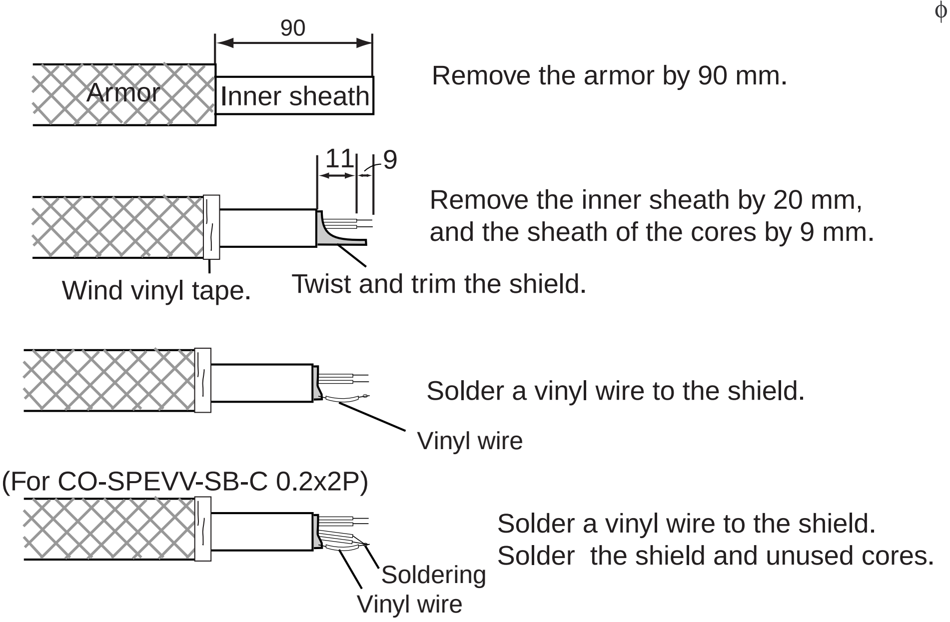

Fabrication of TTYCS-1 for connection to the transceiver unit

Distress alert IC-302-DSC/Indicator IC-303-DSC

Use TTYC-4 (Japan Industrial Standard type, or equivalent) or CO-SPEVV-SB-C 0.2X5P cable and fabricate it as below.

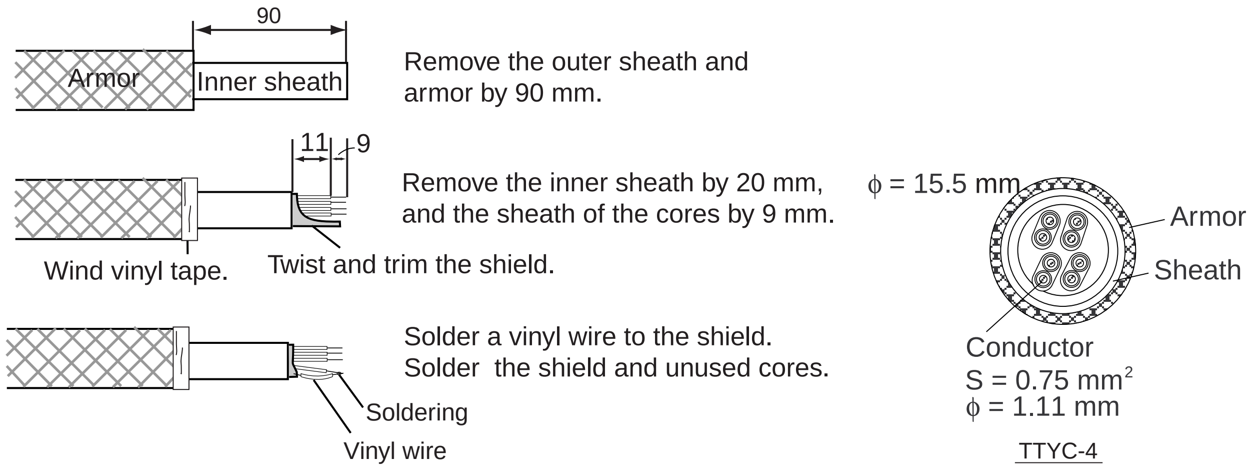

Fabrication of TTYC-4 for connection to the transceiver unit

External BK

Terminal No.	Signal name	Function	Object
33	BK +	Output voltage: 24 VDC	Power of relay BK for other radiotelephone
34	BK -	GND	0 V
36	TX KEYED	Go to GND on transmitting.	BK control for other radiotelephone
37	RX MUTE	Receiver circuit is muted when this line is GND.	BK control from other radiotelephone
38	SHIELD		

Note: When GND line from other radiotelephone is connected to the chassis, float the ground.

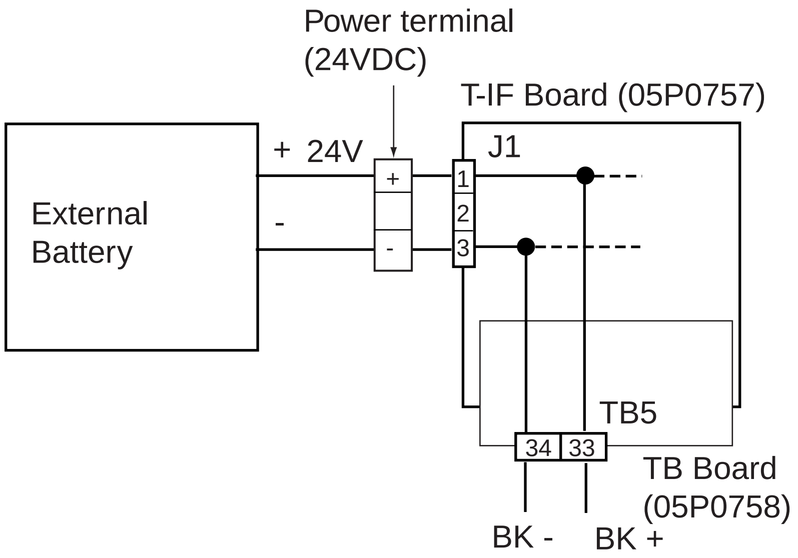

Power of BK

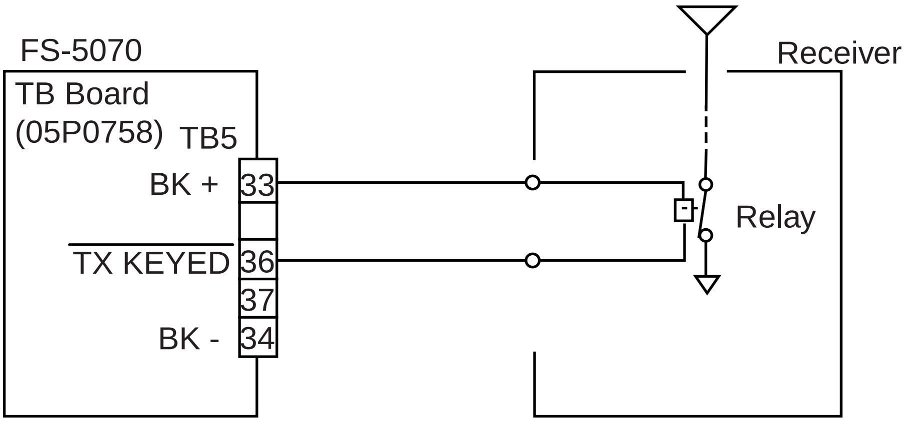

Example of connection with receiver

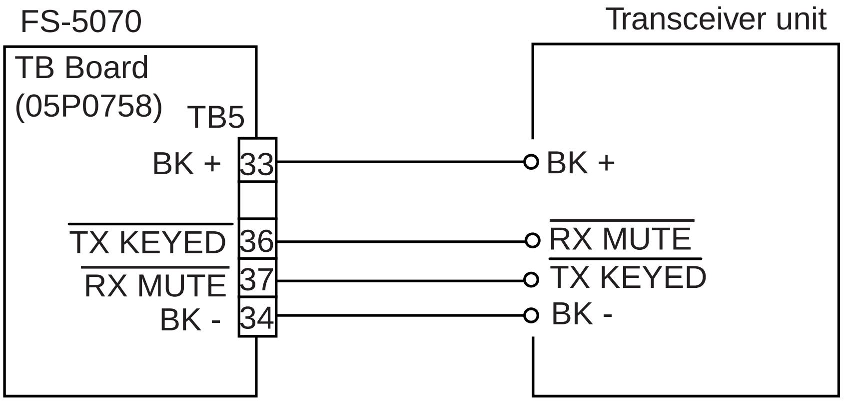

Example of connection with Tx/Rx unit

MIF unit (future addition)

Use 17JE-13250-02 connector (supplied as installation materials) to connect MIF unit to REMOTE port on transceiver unit. Note that the REMOTE terminal on FS-5070T is for maintenance only at this stage.

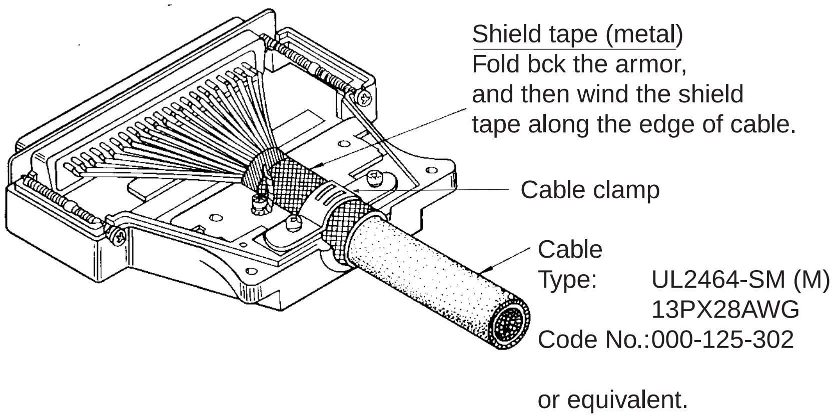

Fabrication of cable for MIF unit

Printer interface

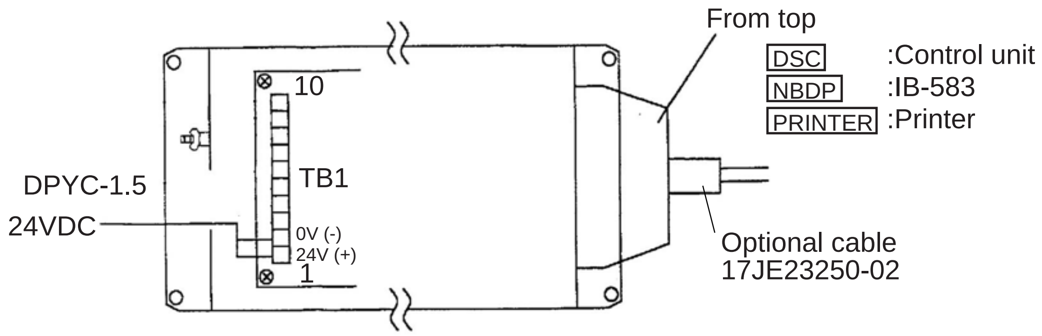

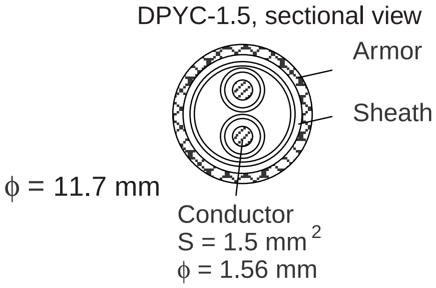

2.3 AC-DC Power Supply Unit PR-850A (Option)

When connecting to an AC and DC ship's mains, the optional AC-DC power supply unit PR-850A is required. Attach the crimp on lug FV5.5-S4 (local supply) to the following cables (Japan Industrial Standard) or equivalent (local supply) for connection with the power supply unit.

- For AC power input: DPYC-2.5
- For DC power input: DPYC-10

Wiring

Connect cables to the input terminal, using crimp-on lugs.

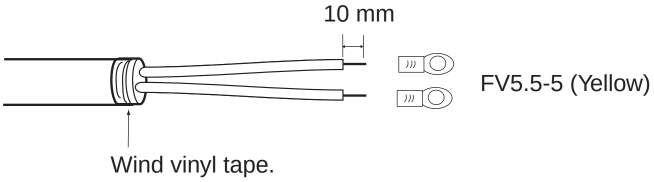

Selection of input voltage

The input voltage is adjustable for 100/110/120/200/240 VAC, and is factory-set for 220 VAC. To select other input voltages, open the top cover and change the wiring according to the figure below. After changing the input voltage, correct the front panel sticker accordingly.

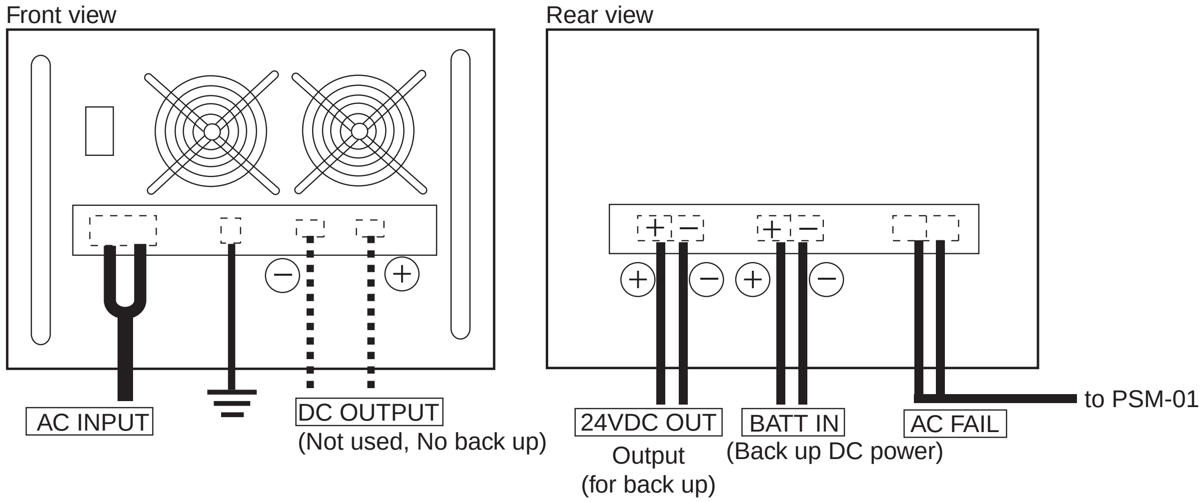

AC FAIL line

When the power supply is switched to the back-up, AC and FAIL at PR-850A are shortened. To lower the transmitting power to LOW2, MAIN FAILURE (TB#35) is grounded to BK GND (TB#34) at FS-5070T.

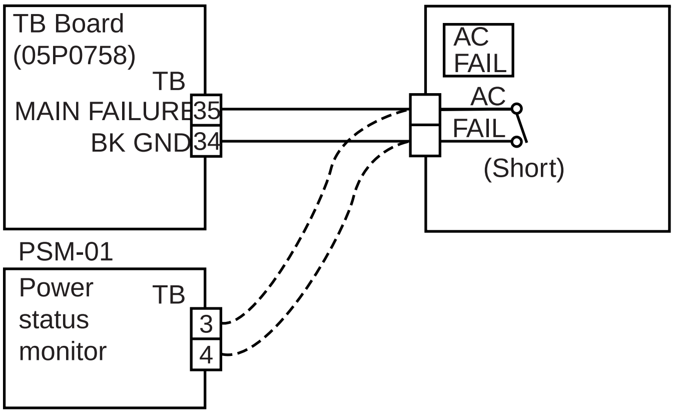

100VAC input

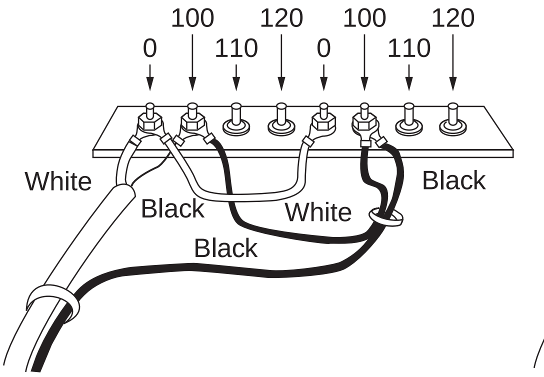

110VAC input

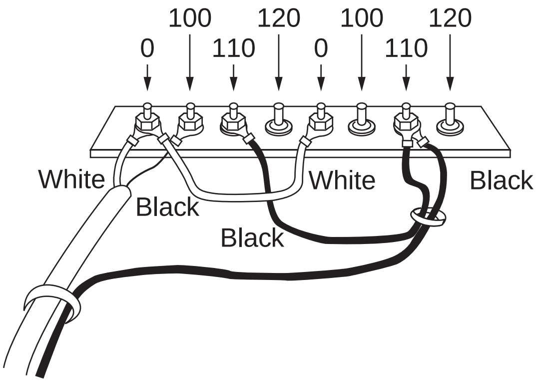

120VAC input

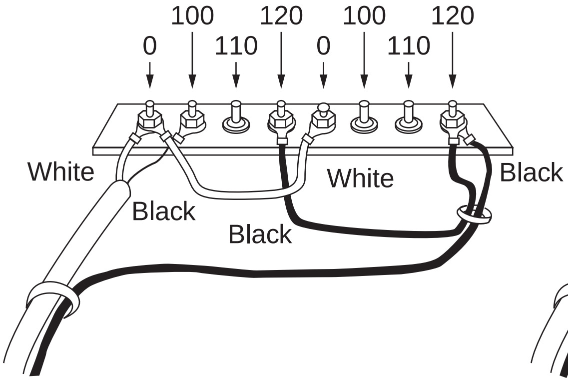

200VAC input

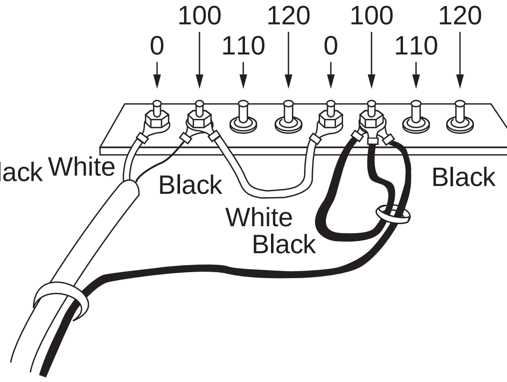

➡(Default setting)
220VAC input

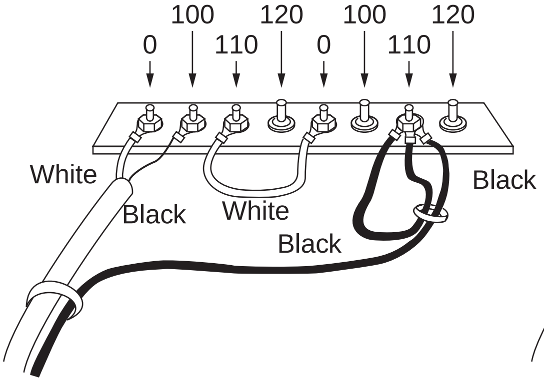

240VAC input

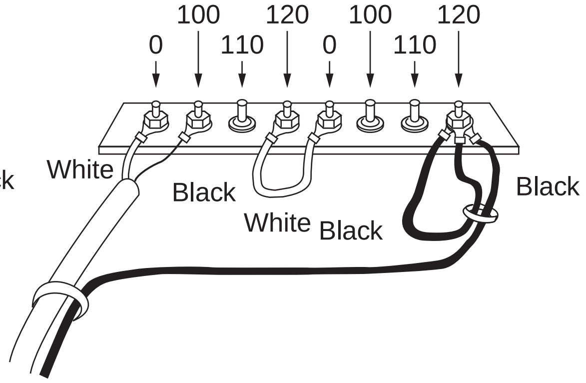

2.4 Automatic Antenna Switch (Option)

Connect the SSB antenna to the ANT terminal, and use the antenna cable to connect the TRX terminal and the antenna coupler (ANT terminal) as shown below. For power, connect the DPYCY-1.5 cable (Japan Industrial Standard) between the following terminals on the transceiver unit and the automatic antenna switch;

Transceiver unit (RELAY board): TB3 (or TB5) terminal (+), TB4 (or TB6) terminal (-)

Automatic antenna unit: Power terminals (+, -)

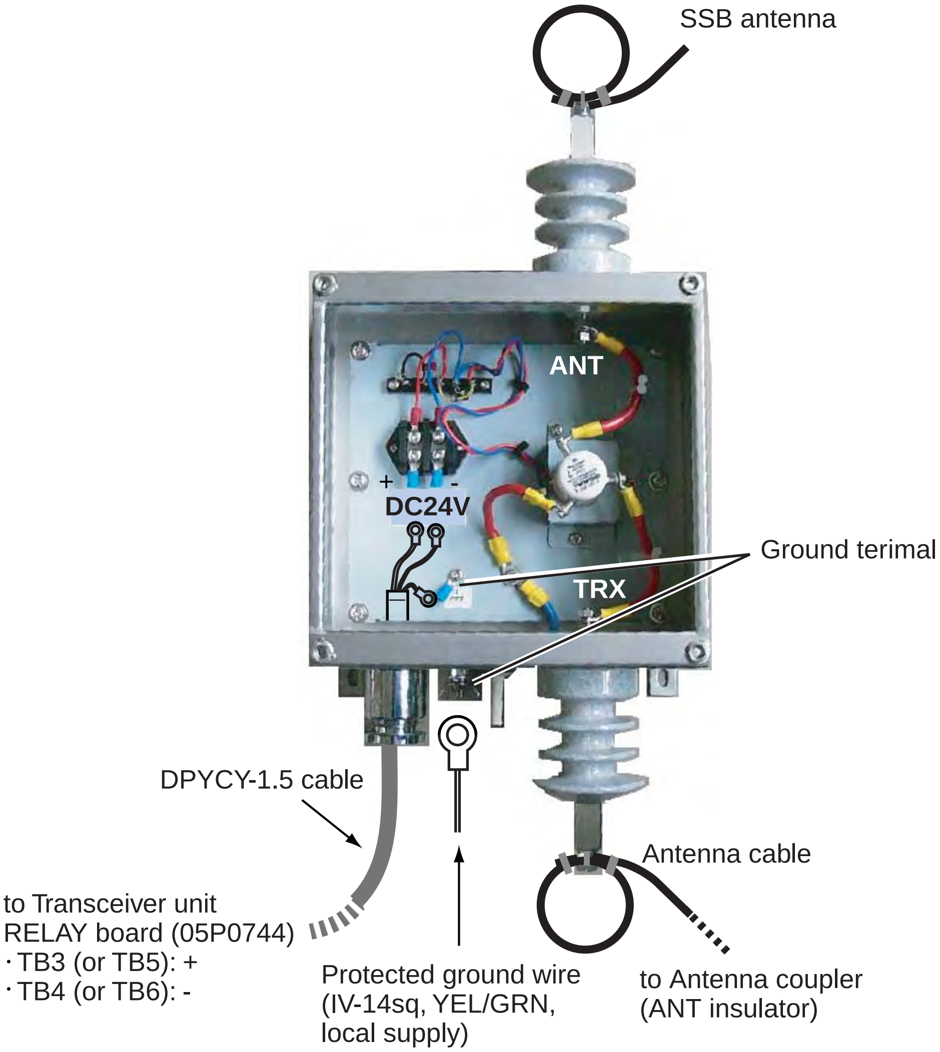

DPYCY-1.5, fabrication

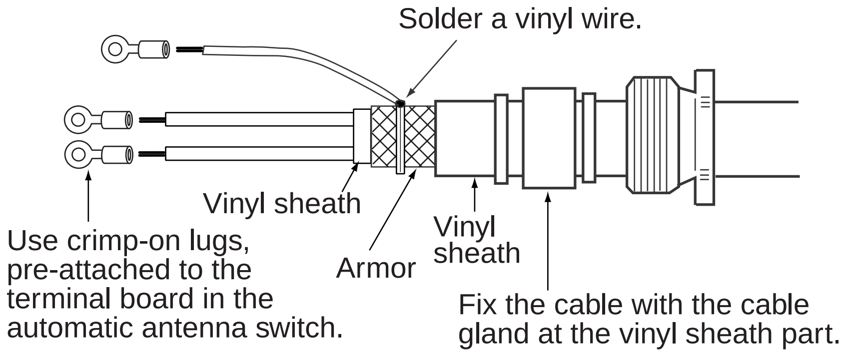

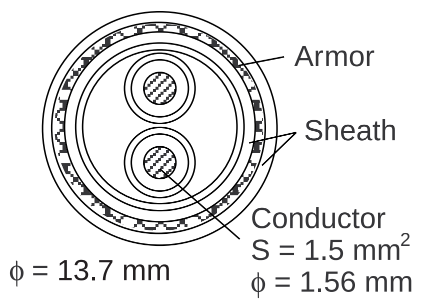

DPYCY-1.5, sectional view

RELAY board (location)

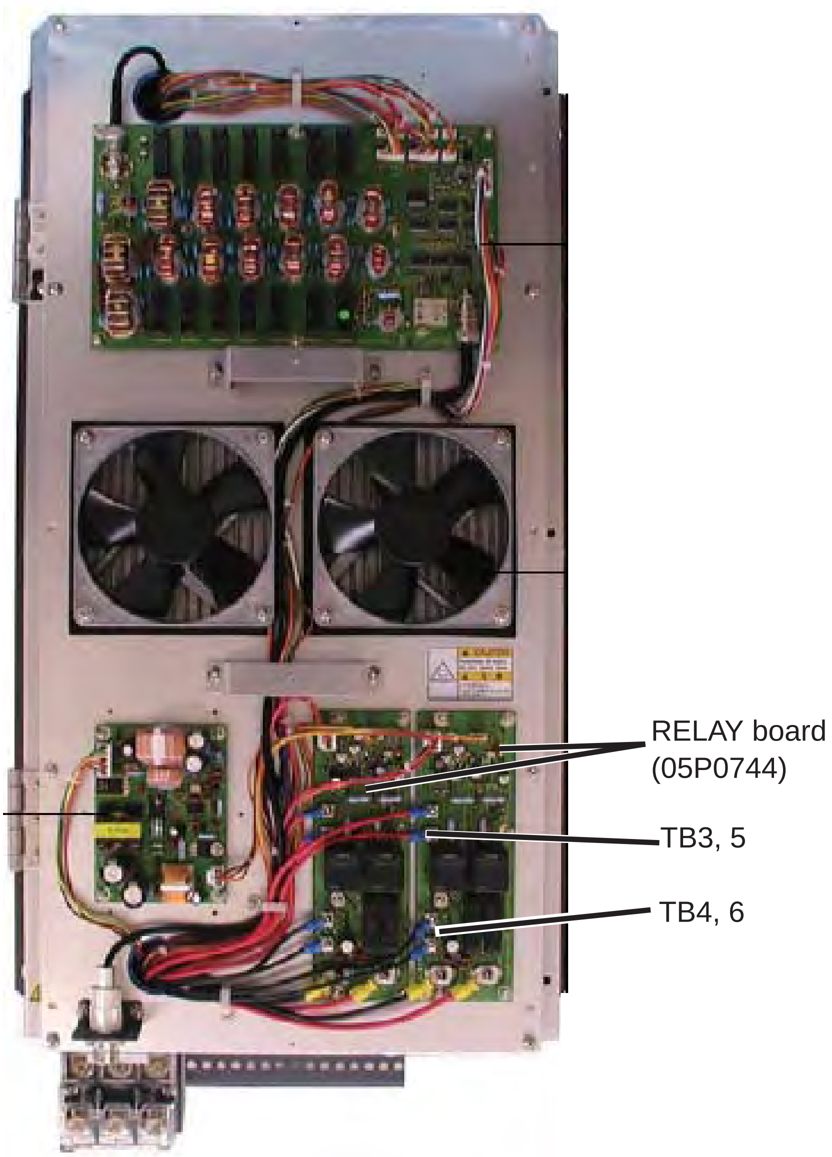

Transceiver unit (FS-5070T, cover removed)

3. INITIAL SETTING

After completing the installation, check all connection before applying the power.

Note: For the MMSI setting, ask your dealer.

3.1 Performance Check

Receiver

1. Set the unit as follows.
   a) Speaker: ON
   b) Squelch: OFF
   c) AGC: FAST
   d) Sensitivity: Max
2. Confirm that a signal can be received on each band. If noise or signal is weak, check the antenna lead-in section, coaxial cable connection and ground connections.

Transmitter

1. On each band, confirm that the antenna is automatically tuned when the **LOG/TUNE** key is pressed. Automatic tuning time of the antenna should take no longer than 15 seconds to tune. If more than 15 seconds, re-check antenna length.
2. Communicate with the handset, confirming that antenna current (IA) changes with voice level.

3.2 Initializing Control Unit and Transceiver Unit

The control unit is commonly used with the transceiver unit of FS-1570, FS-2570 and FS-5070. Therefore, initialize the units at installation as follows.

1. Turn on the power switch on the control unit. A while later, the radiotelephone (RT) screen appears.
2. Open the transceiver unit and press the reset switch S1 on the T-CPU board 05P0732.

The following screen appears.

```
MMSI SET
MMSI CLEAR
ALL CLEAR
```

3. Enter the password referring to appropriate FURUNO INFORMATION. Regulations prohibit the release of the password to users.
4. Rotate the ENTER knob to select MMSI SET and press the ENTER knob.
5. Enter MMSI (Own ship's ID).
6. Turn off the power and then turn it on again.
7. Do the initialization as follows.
   1) Press the SET UP key to show the Set up menu.
   2) Enter the password.
   3) Select LOAD DEFAULT and press the ENTER knob.
   4) Select Yes and press the ENTER knob.
   5) Press the CANCEL key to return to the menu screen.
   6) Select MEM CLR from the menu screen and press the ENTER knob.
   7) Select LOAD DEFAULT and press the ENTER knob.
   8) Select Yes and press the ENTER knob.
   9) Press the CANCEL key to return to the menu screen.
8. Turn off the power at the control unit.

Note: If your system has two control units, do the steps 6) to 9) in step 7 from the second control unit.

3.3 Manual 2182 kHz Tuning Preset

For safety measure, it is required that 2182 kHz be tunable both automatically and manually. The setup to enable manual tuning, in the event the antenna tuner system fails, is made with the DIP switches in the antenna coupler. Be sure not to transmit during silent period (00 to 03 min. 30 to 33 min. of every hour).

1. Remove the top cover of the antenna coupler. Set the S1 switch on Coupler Board to AUTO.

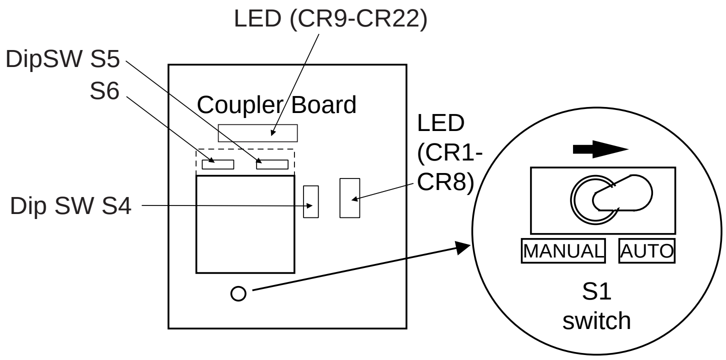

S1 switch on the COUPLER Board

2. Turn the control unit on.
3. Press the **1/RT/2182** key down for two seconds.
4. Press and hold the **LOG/TUNE** key down for two seconds. “TUNE” appears on the LCD. “TUNING: OK” appears when tuning is completed. Record the status (on or off) of LEDs CR1 – CR22 on the COUPLER Board.
5. Set S1 switch to MANUAL.
6. Set S4, S5, S6 DIP switches so that LED state is the same as in step 4.

   The relations between the DIP switch and LED are shown below. When a DIP switch is turned on, the appropriate LED lights.

DIP switch		LED No.	LED status
S4	#8	CR1	
	#7	CR2	
	#6	CR3	
	#5	CR4	
	#4	CR5	
	#3	CR6	
	#2	CR7	
	#1	CR8	
S5	#8	CR9	
	#7	CR10	
	#6	CR11	
	#5	CR12	
	#4	CR13	
	#3	CR14	
	#2	CR15	
	#1	CR16	
S6	#8	CR17	
	#7	CR18	
	#6	CR19	
	#5	CR20	
	#4	CR21	
	#3	CR22	

7. Return the S1 switch to AUTO, confirming that LEDs do not change. If different, repeat steps 5 and 6.
8. Set the S1 switch to MANUAL.
9. Make sure it is not silent time, and communicate with the handset. Confirm that IA changes with voice level.
10. Set the S1 switch to AUTO. Close the cover of the antenna coupler.

For technician

Please pass on the following information to the customer.

- When the auto tuning circuit is broken, transmission is available by the manual tuning (setting the S1 switch to MANUAL).
- Do not change the settings of DIP switch in the antenna coupler.

3.4 System Setup

Enter system settings as below after the installation. To prevent accidental transmission of the distress alert, disconnect the antenna. These settings should be entered by a qualified technician. The installer enters system settings on the System Setup menu. A password is required to access this menu. Under no circumstances shall the operator access the System Setup menu.

3.4.1 Opening the System Setup menu

1. Press **SETUP** key to display the Setup menu.
2. Rotate **ENTER** knob to select “SYS SETUP”.
3. Enter the password referring to appropriate FURUNO INFORMATION to display the System setup menu. The password cannot be informed customers by statute.

```
System Setup
EQUIPMENT TYPE        : 5070
DSC SYSTEM SETUP
RT SYSTEM SETUP
LOAD DEFAULT
TEST

PROTECTION    : OFF
```

System setup menu

3.4.2 DSC SYSTEM menu

Choose “DSC SYSTEM SETUP” on the System setup menu, and then press the **ENTER** knob to show the DSC System setup menu.

```
DSC System setup
MMSI: xxxxxxxxx FIXED
MODEM OUT           : 3.0dBm
SIG DET S LEVEL     : 100
REGULATION          : INTL
CLASS               : MF/HF
DIST                : PANEL1
        2006-04-01 00:00:00
```

DSC System Setup menu

MODEM OUT

Adjust the level of the modem output for DSP board (DSC modem, NBDP modem). Normally, this setting is not required.

SIG DET S LEVEL

SIG DET S LEVEL judges whether the DSC frequency to use to send a DSC message is in use or not. The DSC message is not transmitted when the signal strength on the DSC frequency is higher than that set here. When the DSC frequency becomes clear, the DSC message is automatically transmitted. The setting range is OFF - 255 and the default setting is 100.

1. Rotate the **ENTER** knob to select “SIG DET S LEVEL”.
2. Press the **ENTER** knob to display the S LEVEL pop-up window.

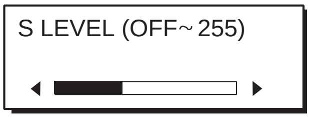

SIG DET S LEVEL pop-up window

3. Rotate the **ENTER** knob to adjust the indicator bar. Too low a setting stops transmission of a DSC message because it detects noise on the DSC frequency. Alternately, too high a setting transmits the DSC message though low signal level is present on the DSC frequency used.
4. Press the **ENTER** knob to finish.

<u>REGULATION</u>

Set the regulation to be used.

1. Rotate the **ENTER** knob to select “REGULATION”.
2. Press the **ENTER** knob.

Regulation pop-up window.

3. Rotate the **ENTER** knob to select “INTL” or “RUSSIA”.
   Only for Russia registry, select “RUSSIA”.
4. Press the **ENTER** knob to finish.

<u>CLASS</u>

Set the watch receiver function as below.

1. Rotate the **ENTER** knob to select “CLASS”.
2. Press the **ENTER** knob to display the pop-up window.

Class pop-up window

3. Select “MF/HF” or “MF” as appropriate.
   MF/HF: Maximum six distress/safety frequencies are available. (A1, A2, A3 and A4 area)
   MF: Distress/safety frequency is 2187.5 kHz only (A1 and A2 area).
   NONGM: Not used.
4. Press the **ENTER** knob to finish.

<u>DIST</u>

Shows the last transmitted DISTRESS information.

3.4.3 RT System setup

Choose “RT SYSTEM SETUP” on the System setup menu, and then press the **ENTER** knob to show the RT (Radio Telephone) System setup menu.

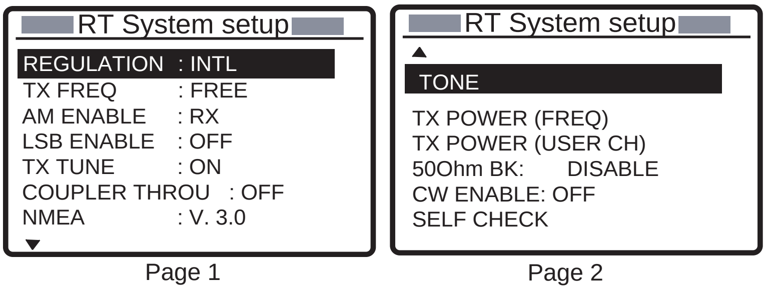

RT Setup menu

System setting of RT

Set the RT similarly with DSC. Do the setting at System setup menu at the transceiver unit.

Item	Description		Setting
REGULATION	Select the national regulation to change the frequency, user channel, etc.		**INTL**, (RUSSIA)
TX FREQ	Select the frequency to transmit. **FREE:** Any frequency can be set. **MARINE/USER:** Can use the frequency and radio type set in the marine band and the user channel. **ITU/USER:** Can use the frequency and radio type set in the user channel or permitted with ITU channel. **USER:** Can use the frequency and radio type set in the user channel.		**FREE**, MARINE/USER, ITU/USER, USER
AM ENABLE	Select the method of AM (H3E). OFF: TX/RX are not available. TRX: TX/RX are available. RX: RX only is available.		OFF, TRX, **RX**
LSB ENABLE	Select ON to transmit/receive LSB.		**OFF**, ON
TX TUNE	Turn the tuning of the antenna coupler on/off.		OFF, **ON**
COUPLER THROU (through)	OFF only.		**OFF**
NMEA	Choose the acceptable NMEA version.		**V. 3.0**, COMPATIBLE
TONE	For maintenance.		
TX POWER (FREQ) TX POWEER (USER CH)	TX MODE	Select the mode to set the TX power.	
	TX FREQ (CH)	Select the frequency to set.	**2182.0 kHz**
	TX POWER	Select the output level to set TX power.	**HIGH**, MID, LOW1, LOW2, TUNE
	TX POWER ADJ	Set the TX power.	0-255, **0**
	TX TONE	Transmit TONE.	**OFF**, ON
	LOAD DEFAULT	Restore TX power settings to default.	YES, **NO**
50 Ohm BK	Selects the installation situation of the 50 ohms BK.		**ENABLE**, DISABLE
CW ENABLE	Enable/disable the CW.		**OFF**, ON

Bold: default setting

<u>Antenna system and setting of “50 ohm BK</u>

The “50 ohm BK” setting may be changed according to the antenna system. Examples are shown below, including the antenna BK relay and RX DIV kit described on Chapter 4.

When using the antenna connected to ATU for the receiving, the TX/RX matching circuit is tuned with the transmitting frequency when tuning.

Antenna system-1, duplex

“50 ohm BK” setting: Disable

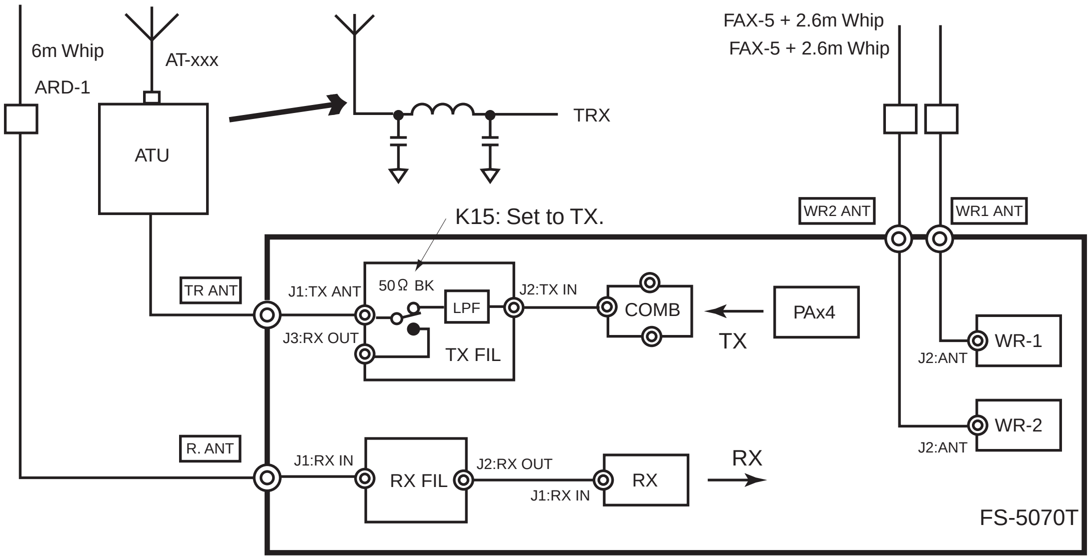

Antenna system-2, semi-duplex

“50 ohm BK” setting: Enable

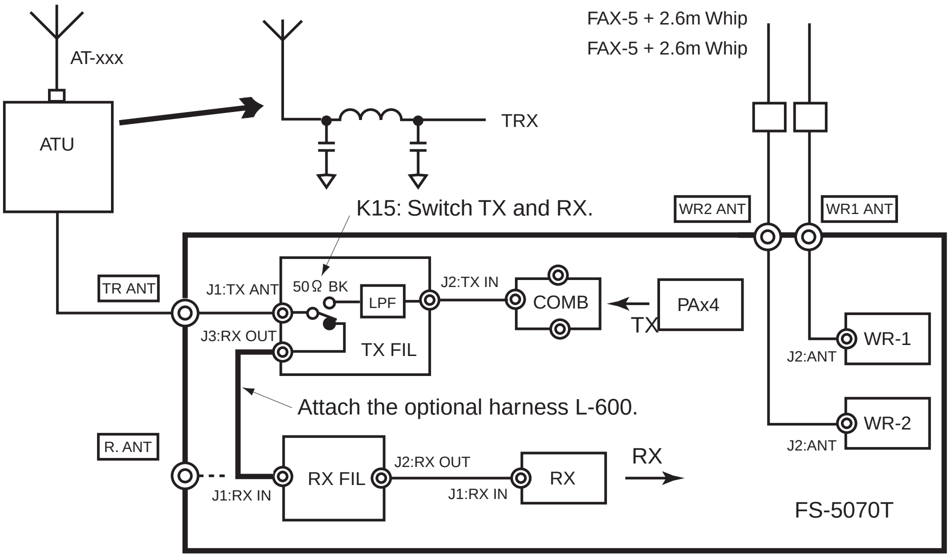

Antenna system-3, semi-duplex

"50 ohm BK" setting: Disable

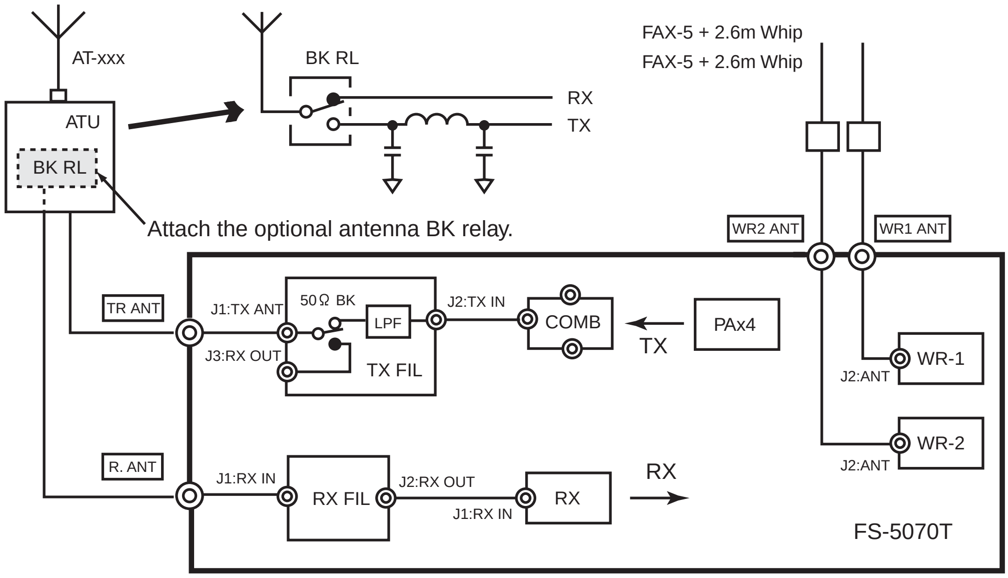

Antenna system-4, semi-duplex (common using WR2 antenna with RT antenna)

"50 ohm BK" setting: Enable

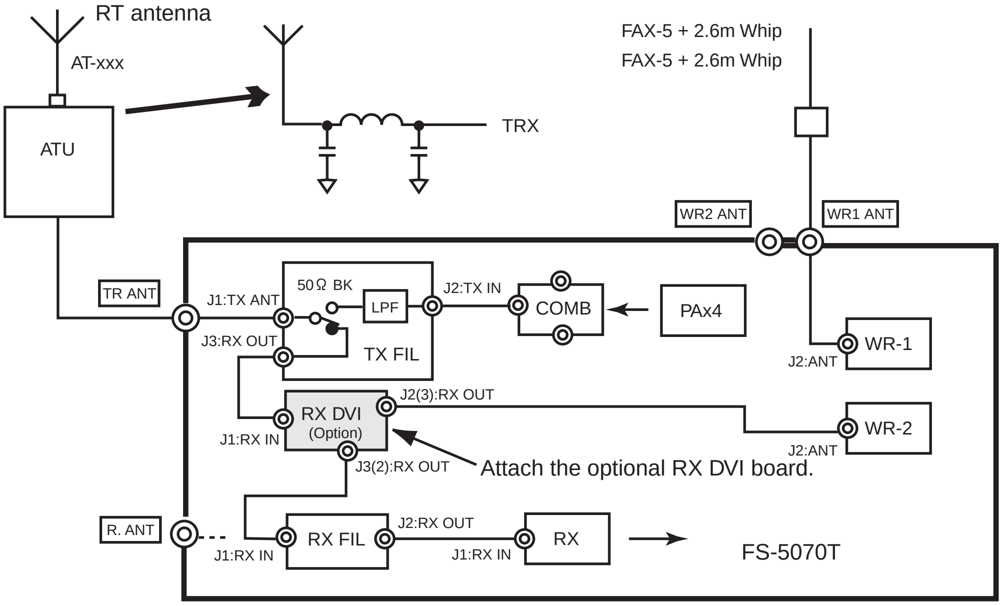

Antenna system-5, semi-duplex (common using WR2 antenna with receive antenna)

"50 ohm BK" setting: Disable

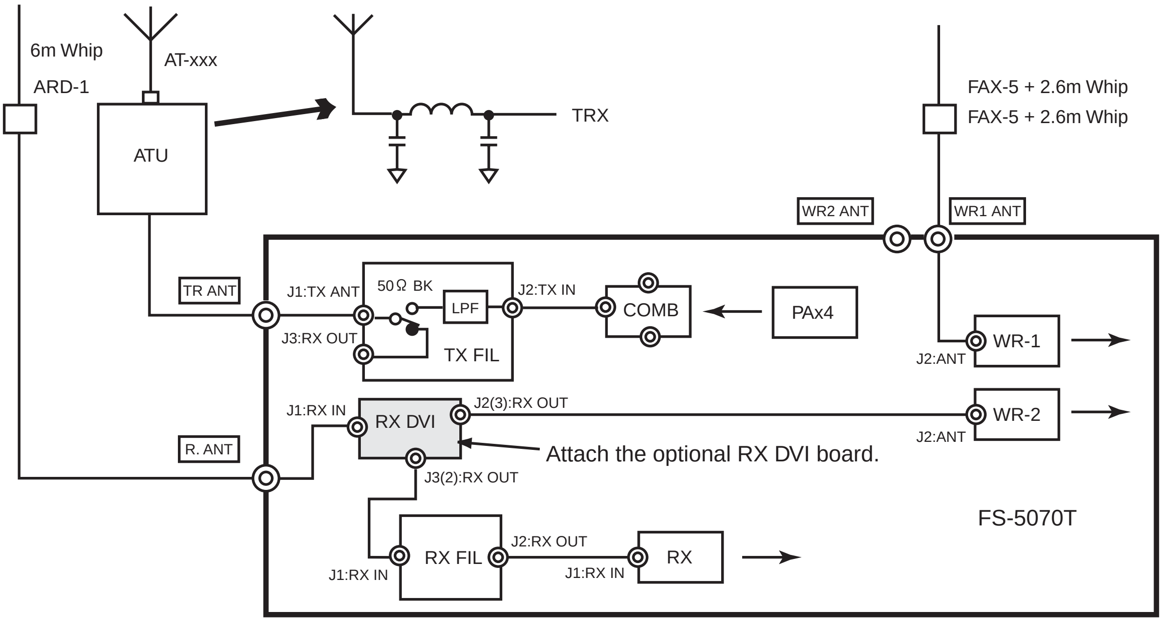

Antenna system-6, semi-duplex (common using WR2 antenna with RT antenna)

"50 ohm BK" setting: Disable

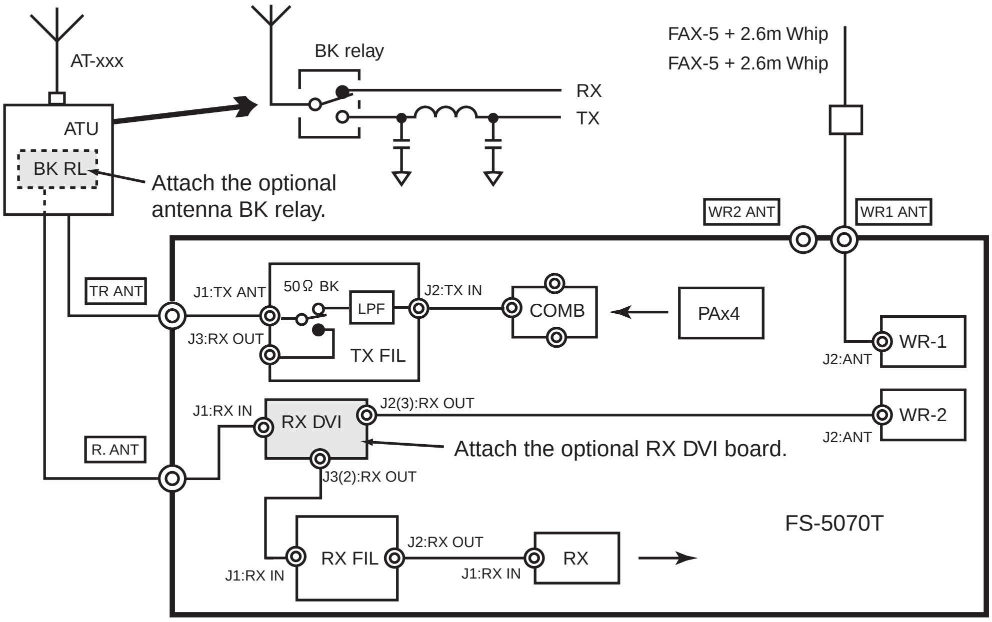

3.5 Setting DIP Switches

Set DIP switches depending on equipments connected as shown below.

Location of DIP Switches

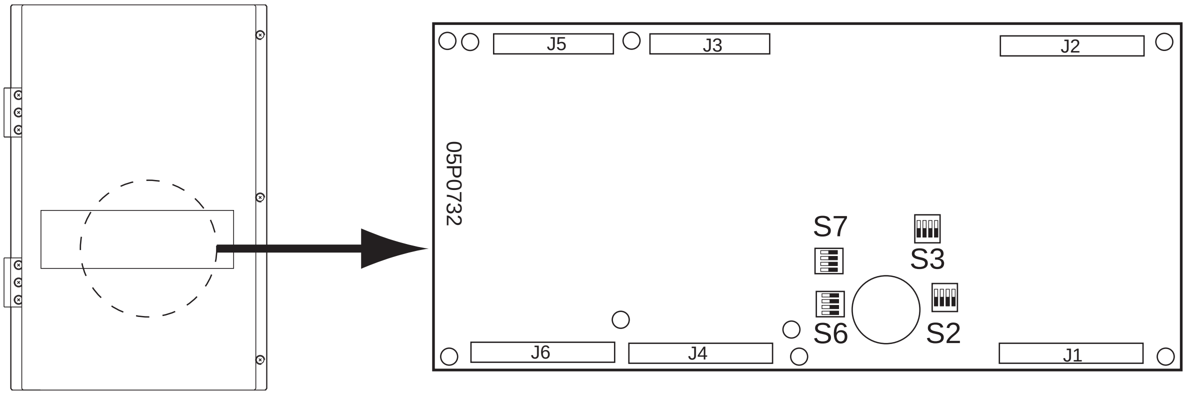

Transceiver unit

T-CPU Board (05P0732)

IEC (NMEA)

	RS-422	Current Loop	Default setting
S2-#1	ON	OFF	**OFF**

MIF

	RS-422/232C		Current Loop	Default setting
	RS-422	RS-232C		
S2-#3	ON	-	OFF	**OFF**
S3-#1, 2 (both)	ON	OFF	ON	**OFF**
S3-#3, 4 (both)	OFF	ON	OFF	**ON**

Note: S2-#4 is not used.

IC-302

<table>
<tr><td colspan="5">S6</td><td colspan="5">S7</td></tr>
<tr><td>#1</td><td>#2</td><td>#3</td><td>#4</td><td rowspan="2">Default setting: all OFF</td><td>#1</td><td>#2</td><td>#3</td><td>#4</td><td rowspan="2">Default setting: all ON</td></tr>
<tr><td>OFF</td><td>OFF</td><td>OFF</td><td>OFF</td><td>ON</td><td>ON</td><td>ON</td><td>ON</td></tr>
</table>

3.6 Preamp Setting (For FAX-5)

When using the preamp for the watch receiver antenna, set J3 on the W/R Board to ACTIVE in the transceiver unit.

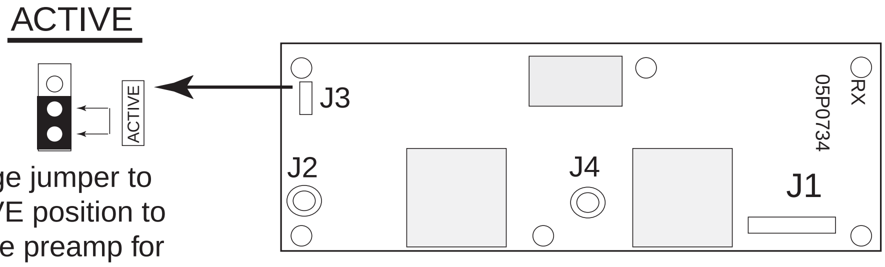

Change jumper to ACTIVE position to use the preamp for the watch receiver antenna.

This page is intentionally left blank.

4. OPTION KIT

4.1 Antenna BK relay

With the optional antenna BK relay, the antenna coupler can be modified to enable SSB communications when there is RX ANT trouble.
The cable marked with the asterisk on page 2-1 should be "hooked" (by using a cable tie, etc.) near the R_ ANT connector so that it can be connected immediately when there is RX ANT trouble.

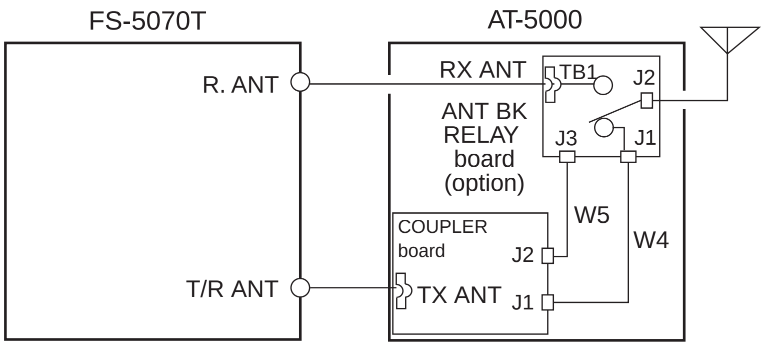

Connecting radiotelephone to antenna BK relay equipped antenna coupler

<u>Mounting of the antenna BK relay</u>

Necessary parts: Antenna BK relay (Type: OP05-35-H, Code No.: 000-056-878)

Name	Type	Code No.	Qty	Remarks
Antenna BK Relay board	05P0359	005-597-150	1	PCB assembly
VH harness	05-468 (2-2P)	005-927-590	1	W4
PH harness	05-469 (3-3P)	005-927-600	1	W5
Panhead screw	M3X8	000-881-404	5	

1. Open the antenna coupler, and mount the Antenna BK Relay board using five panhead screws supplied as shown below.

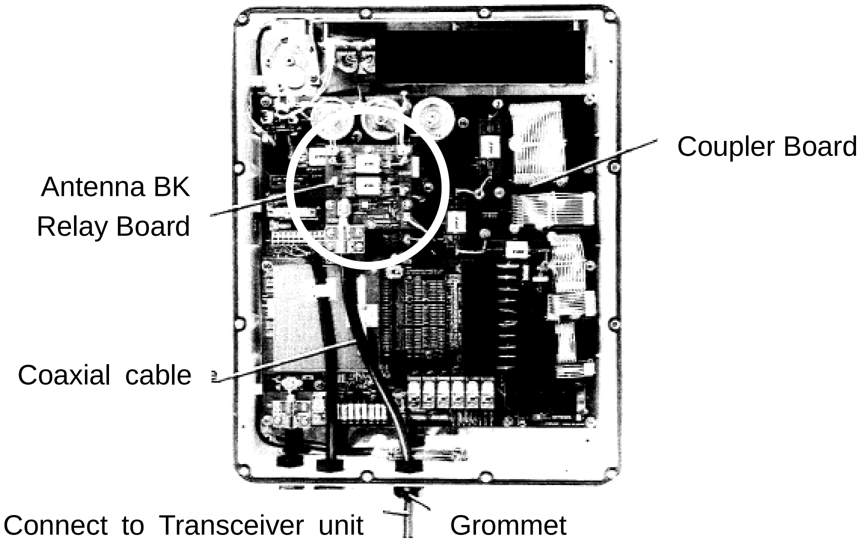

2. Remove the waterproofing material from the grommet on the antenna coupler.
3. Pass the coaxial cable through the grommet and connect it to TB1 on the Antenna BK Relay board.
4. Connect the other end of the cable to the R. ANT on the transceiver unit, referring to the figure on page 2-1.
5. Disconnect the connector from J1 on the COUPLER board, and connect it to J2 on the Antenna BK Relay board.
6. Connect the harnesses (2P and 3P, supplied) between Antenna BK Relay board and the COUPLER board.

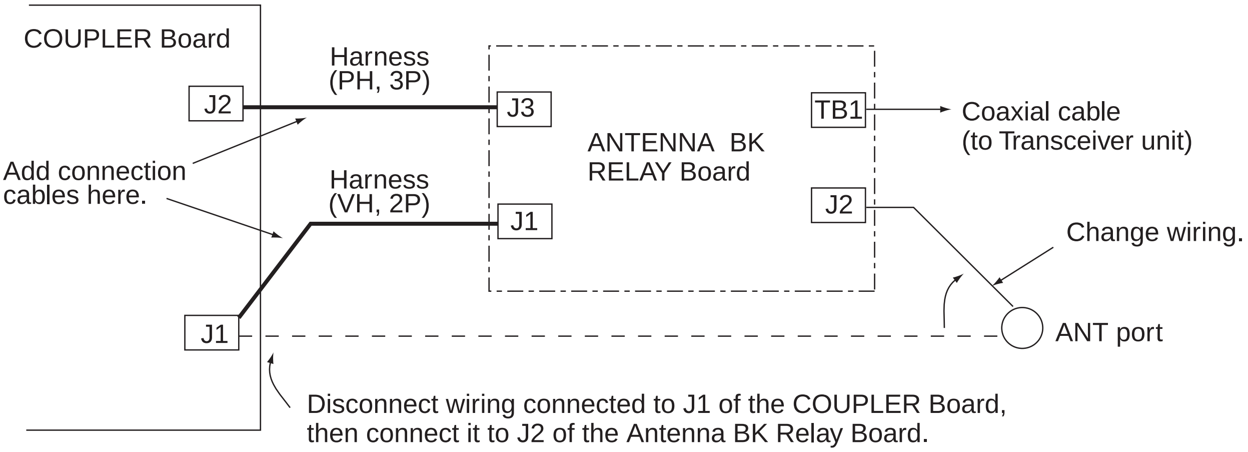

Note: Be sure to pass the wire from J2 of the Antenna BK Relay Board through a cable fastener on the COUPLER board.

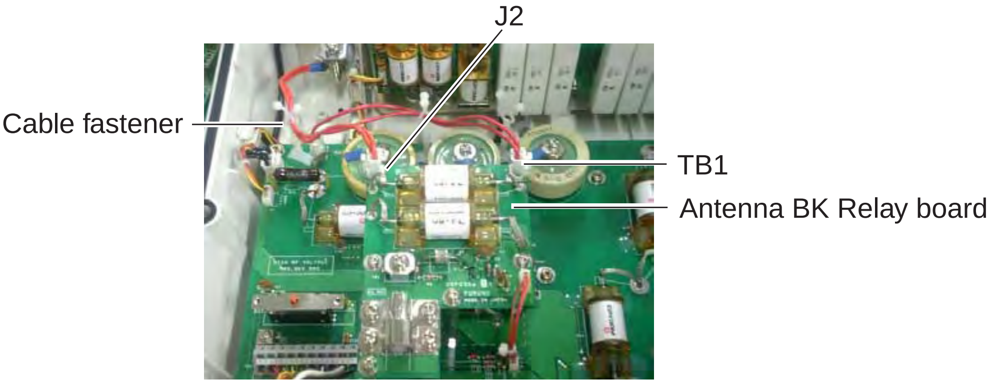

Antenna coupler, inner view

4.2 DSC Routine Frequency Board

The optional W/R Board 05P0734 enables reception of DSC routine frequencies while SSB radiotelephone connection. The connection of whip antenna to ANT (W/R2) port for DSC routine frequency is also necessary.

Necessary parts: W/R2 Board Kit, Type: OP05-104, Code No.: 001-004-450

Name	Type	Code No.	Qty	Remarks
W/R Board	05P0734A	001-005-310	1	
Coaxial plug	FM-MP-7	000-161-293-10	1	
Cable assy, with mini pin	L-520	000-114-133	1	

Mounting

1. If using the preamplifier, set J3 on W/R board in the kit to ACTIVE (See page 3-13). In this section, W/R Boards are described as below.
   -Pre-attached W/R Board: W/R1
   -Optional W/R Board: W/R2
2. Open the transceiver unit.
3. Remove the shield cover at where the W/R2 Board should be fixed in the transceiver unit.
4. Attach the W/R2 Board to the position shown, and fasten it with six screws.
5. Insert the mini-pin plug, coming from the coaxial connector ANT W/R2, to J2 on the W/R2 Board.
6. Connect the cable assy with mini-pin (L-520) between J4 on the W/R2 Board and J7 on the TX-RX Board 05P0733.
7. Remove the shield covers for W/R Board (preset) and TX-RX Board.
8. Pass the above cable assy through the notch on the shield covers removed at step 3 and 7, and then attach the shield covers.

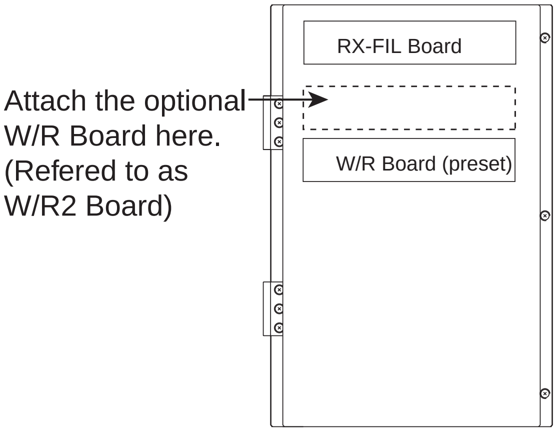

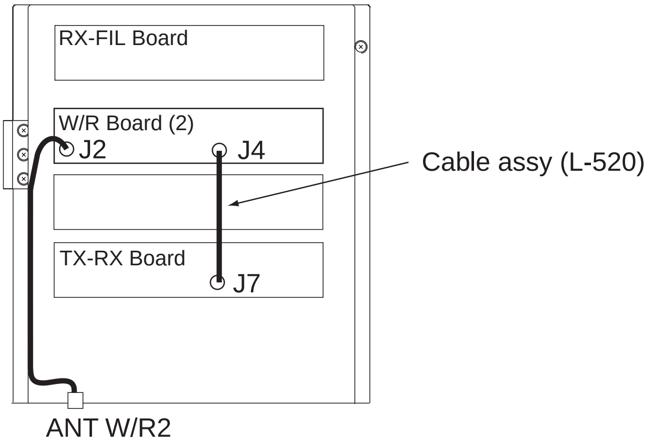

4.3 Signal Splitter Board

To use the SSB antenna (R. ANT) for routine watch keeping, the following modification is necessary. The optional Signal Splitter (RX DIV) and W/R2 Board kit are required.

Note: When transmitting, DSC routine frequency cannot be received if R. ANT is connected to AT-5000.

Necessary parts: Signal Splitter (RX DIV), Type: OP05-103, Code No.: 005-965-780

Name	Type	Code No.	Qty	Remarks
RX DIV Board	05P0806	005-965-120	1	
Cable assy, with mini pin	L-400	000-106-477	1	
Cable assy, with mini pin	L-600	000-161-945	1	Not used.
Cable assy, with mini pin	L-140	000-522-074	1	
Spacer	SQ-15	000-159-299-10	4	
PH connector	05-865 (3-3P)	005-965-810	1	

1. Open the transceiver unit.
2. Remove the shield cover for the RX-FIL Board (05P0762).
3. Disconnect the coaxial cable from J1 on the RX-FIL Board.
4. Attach the optional RX DIV Board on the top of the RX-FIL Board, using four spacers.

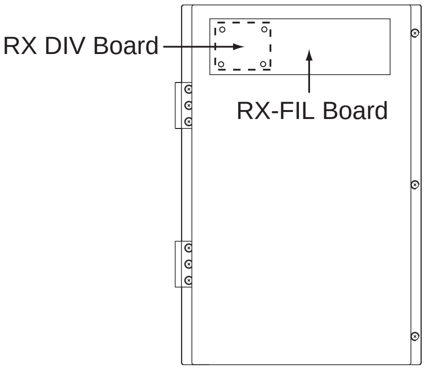

5. Attach the coaxial cable disconnected at step 3 to J1 on the RX DIV Board.
6. Connect the cable assy (L-400, supplied) between J1 on the RX-FIL Board and J3 on the RX DIV Board.
7. Disconnect the coaxial cable from J2 on the W/R2 Board (option).
8. Connect the cable assy (L-140, supplied) between J2 on the RX DIV Board and J2 on the W/R2 Board.
9. Connect the PH connector between J4 on the RX DIV Board and J4 on the RX-FIL Board.

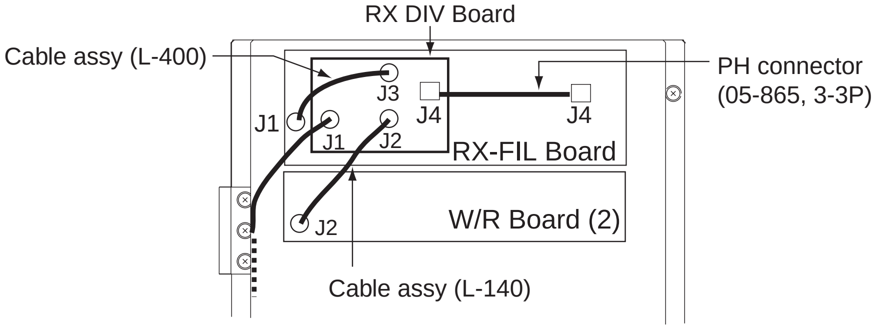

4.4 Connecting of NBDP Terminal Unit OP05-100 (IB-583)

To communicate with telex, the NBDP terminal unit is required.

Name: NBDP terminal unit set, Type: OP05-100, Code No.: 000-056-956

Name	Type	Code No.	Qty	Remarks
Terminal unit	IB-583	000-043-435	1	w/installation materials
DSP Board	OP05-97	005-951-820	1 set	05P0751A

Mounting the DSP Board

1. Open the cover of the transceiver unit.
2. Remove the shield cover from the T-CPU Board (05P0732A).
3. Lay the DSP Board (supplied) on the top of the T-CPU Board, mating J5 andJ6 on the DSP Board to J5 and J6 on the T-CPU Board. Use panhead screws (M3X8, supplied) to fasten the DSP Board.

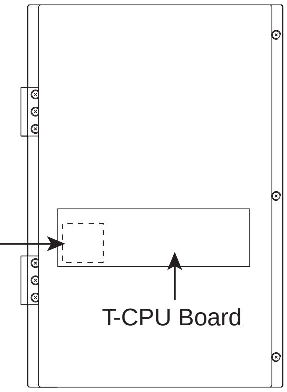

4. Remount the shield cover.
5. Close the cover of the transceiver unit.

4.5 Dummy Load

To short the antenna to the ship’s hull when power is off, mount the optional dummy load in the antenna coupler AT-5000.

Necessary parts (for AT-5000-H): Dummy load (Type: OP05-107, Code No.: 000-011-638)

Name	Type	Code No.	Qty	Remarks
Dummy load	05P0816	001-020-430-00	1	PCB and mounting plate
Pan head screw	4x12, SWCH18A	000-801-070-00	4	

Necessary parts (AT-5000-HS): Dummy load (Type: OP05-108, Code No.: 000-011-639)

Name	Type	Code No.	Qty	Remarks
Dummy load	05P0816	001-020-430-00	1	PCB and mounting plate
Pan head screw	4x12, SWCH18A	000-801-070-00	1	
	M4x8	000-163-200-10	4	

Fix the dummy load (for AT-5000-H or AT-5000-HS) to the position shown below.

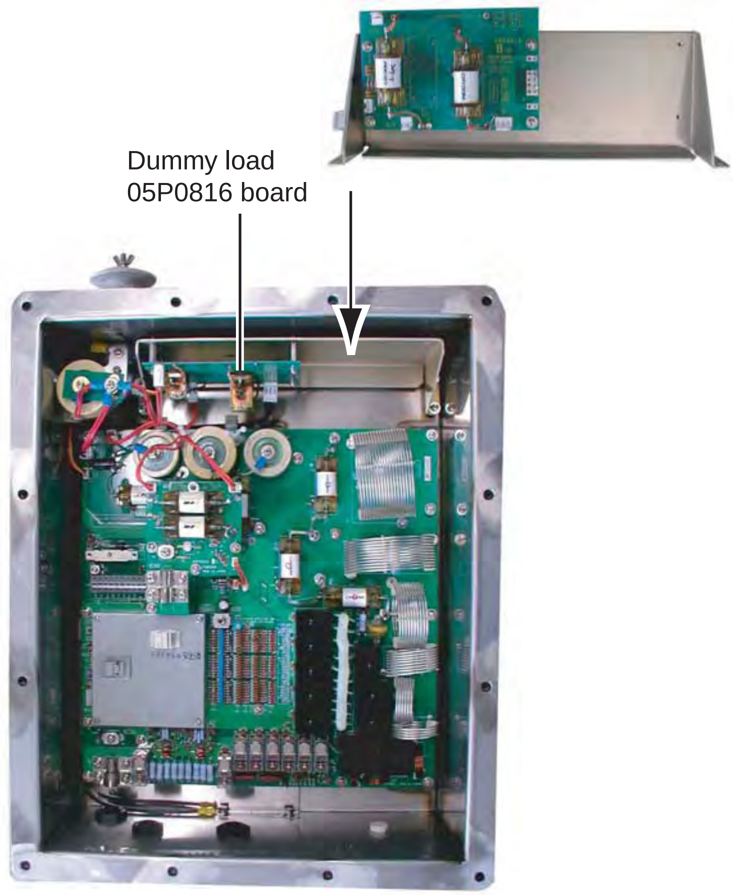

The dummy load has three harnesses. Connect them according to equipment configuration, as shown below and on the next page.

AT-5000, without the dummy load

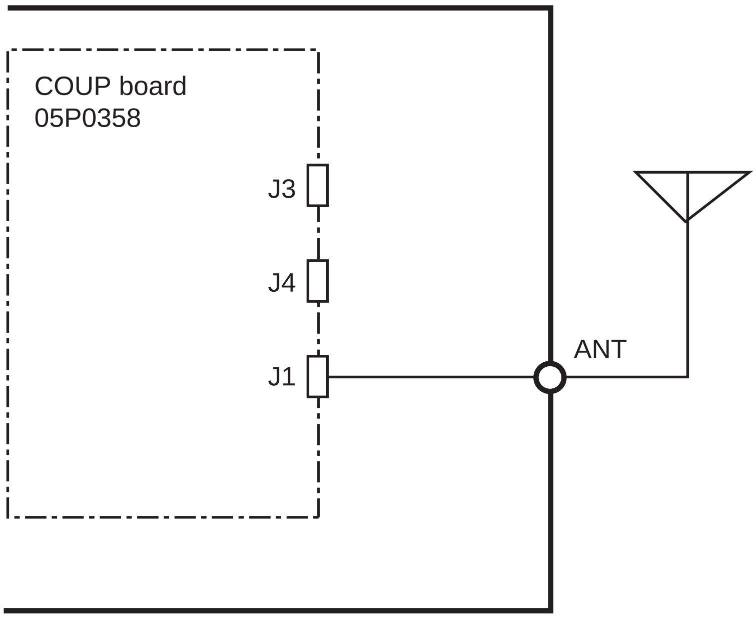

AT-5000, added the dummy load

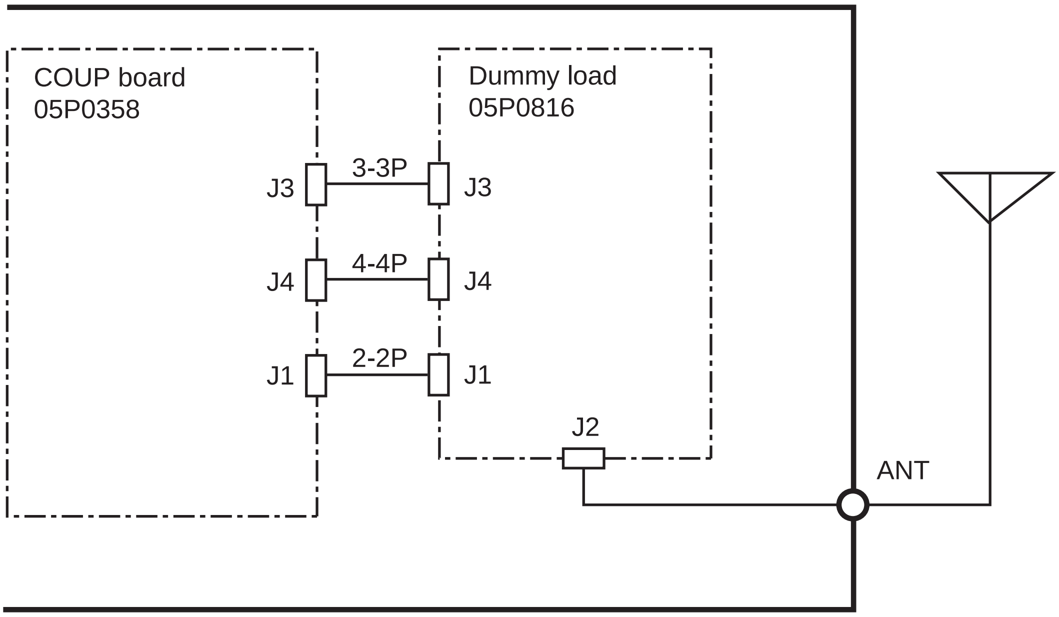

AT-5000, added the dummy load and antenna BK relay (described on page 4-1)

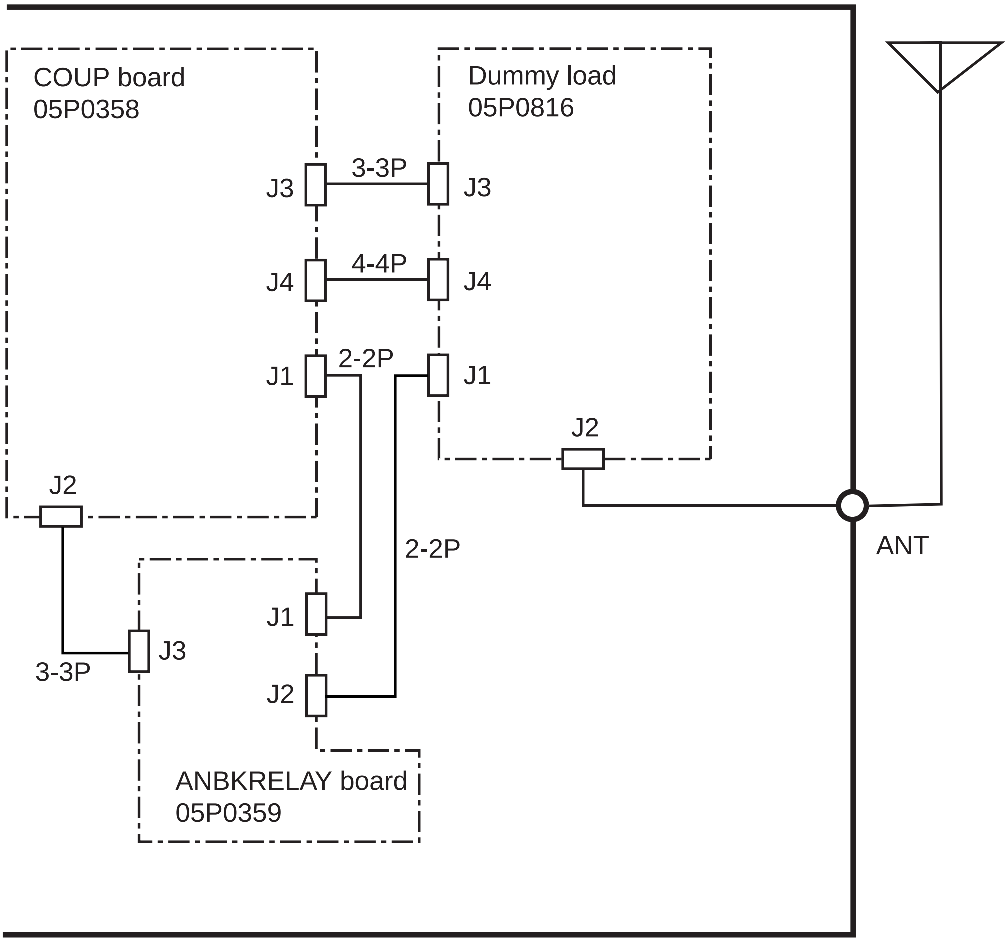

PACKING LIST

FS-2571C-J-A/FS-2571C-E-A/FS-2571C-J-A-HK

A-1

NAME	OUTLINE	DESCRIPTION/CODE No.	Q'TY
ユニット UNIT			
操作部 CONTROL UNIT	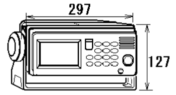	FS-2571C 000-057-442-00	1
付属品 ACCESSORIES		FP05-05700	
ﾊﾝﾄﾞｾｯﾄ HANDSET	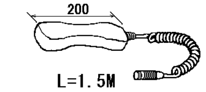	HS-2003-15 000-015-996-00	1
ﾊﾝﾄﾞｾｯﾄﾊﾝｶﾞｰ組品 BRACKET FOR HANDSET	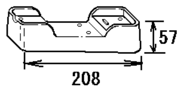	FP05-05510 005-951-790-00	1
付属品 ACCESSORIES	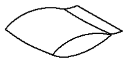	FP05-05511 005-951-920-00	1
工事材料 INSTALLATION MATERIALS		CP05-10300	
ｹｰﾌﾞﾙ組品 CABLE ASSY.	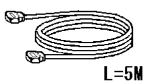	17JE23150-02(D8C) 5M 000-146-015-00	1
工事材料 INSTALLATION MATERIALS		CP05-08801 005-951-930-00	1
図書 DOCUMENT			
遭難警報ﾌﾛｰ(HF) HF DISTRESS ALERT FLOW	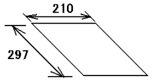	*52-00102-* 000-809-271-1* **	1
遭難警報ﾌﾛｰ(VHF/MF)) VHF/MF DISTRESS ALERT FLOW	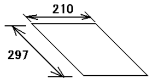	*52-00101-* 000-809-269-1* **	1

ｺｰﾄﾞ番号末尾の[**]は、選択品の代表ｺｰﾄﾞを表します。
CODE NUMBER ENDING WITH "**" INDICATES THE CODE NUMBER OF REPRESENTATIVE MATERIAL.

型式/ｺｰﾄﾞ番号が2段の場合、下段より上段に代わる過渡期品であり、どちらかが入っています。 なお、品質は変わりません。
TWO TYPES AND CODES MAY BE LISTED FOR AN ITEM. THE LOWER PRODUCT MAY BE SHIPPED IN PLACE OF THE UPPER PRODUCT. QUALITY IS THE SAME.
(略図の寸法は、参考値です。 DIMENSIONS IN DRAWING FOR REFERENCE ONLY.)

PACKING LIST

FS-2571C-J-N/FS-2571C-E-N/FS-2571C-J-N-HK

A-2

NAME	OUTLINE	DESCRIPTION/CODE No.	Q'TY
ユニット UNIT			
操作部 CONTROL UNIT	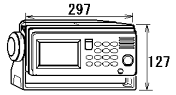	FS-2571C 000-057-442-00	1
付属品 ACCESSORIES		FP05-05700	
ﾊﾝﾄﾞｾｯﾄ HANDSET	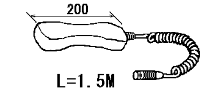	HS-2003-15 000-015-996-00	1
ﾊﾝﾄﾞｾｯﾄﾊﾝｶﾞｰ組品 BRACKET FOR HANDSET	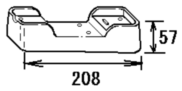	FP05-05510 005-951-790-00	1
付属品 ACCESSORIES	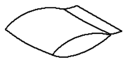	FP05-05511 005-951-920-00	1
工事材料 INSTALLATION MATERIALS		CP05-10310	
工事材料 INSTALLATION MATERIALS	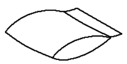	CP05-08801 005-951-930-00	1
図書 DOCUMENT			
遭難警報ﾌﾛｰ(HF) HF DISTRESS ALERT FLOW	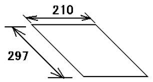	*52-00102-* 000-809-271-1* **	1
遭難警報ﾌﾛｰ(VHF/MF)) VHF/MF DISTRESS ALERT FLOW	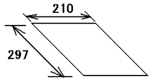	*52-00101-* 000-809-269-1* **	1

ｺｰﾄﾞ番号末尾の[**]は、選択品の代表ｺｰﾄﾞを表します。
CODE NUMBER ENDING WITH "**" INDICATES THE CODE NUMBER OF REPRESENTATIVE MATERIAL.

型式/ｺｰﾄﾞ番号が2段の場合、下段より上段に代わる過渡期品であり、どちらかが入っています。 なお、品質は変わりません。
TWO TYPES AND CODES MAY BE LISTED FOR AN ITEM. THE LOWER PRODUCT MAY BE SHIPPED IN PLACE OF THE UPPER PRODUCT. QUALITY IS THE SAME.
(略図の寸法は、参考値です。 DIMENSIONS IN DRAWING FOR REFERENCE ONLY.)

FURUNO

CODE NO.	005-951-930-00	05DZ-X-9404 -2
TYPE	CP05-08801	1/1

工事材料表
INSTALLATION MATERIALS

CONTROL UNIT

FS-1570*/2570*

番 号 NO.	名　称 NAME	略　図 OUTLINE	型名／規格 DESCRIPTIONS	数量 Q'TY	用途／備考 REMARKS
1	+トラスタッピンネジ　1シュ SELF-TAPPING SCREW	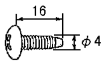	4X16 SUS304 CODE NO. 000-162-605-10	4	
2	ポリカワッシャー WASHER		M4 CODE NO. 000-168-234-10	4	

型式/コード番号が２段の場合、下段より上段に代わる過渡期品であり、どちらかが入っています。　なお、品質は変わりません。

TWO TYPES AND CODES MAY BE LISTED FOR AN ITEM. THE LOWER PRODUCT MAY BE SHIPPED IN PLACE OF THE UPPER PRODUCT. QUALITY IS THE SAME.
（略図の寸法は、参考値です。　DIMENSIONS IN DRAWING FOR REFERENCE ONLY.）

FURUNO ELECTRIC CO ., LTD.　05DZ-X-9404

FURUNO

CODE NO.	005-951-920-00	05DZ-X-9502 -2
TYPE	FP05-05511	1/1

付属品表
ACCESSORIES

番 号 NO.	名　称 NAME	略　図 OUTLINE	型名／規格 DESCRIPTIONS	数量 Q'TY	用途／備考 REMARKS
1	+トラスタッピンネジ　1シュ SELF-TAPPING SCREW	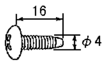	4X16 SUS304 CODE NO. 000-162-605-10	2	
2	ポリカワッシャー WASHER		M4 CODE NO. 000-168-234-10	2	

型式/コード番号が２段の場合、下段より上段に代わる過渡期品であり、どちらかが入っています。　なお、品質は変わりません。

TWO TYPES AND CODES MAY BE LISTED FOR AN ITEM. THE LOWER PRODUCT MAY BE SHIPPED IN PLACE OF THE UPPER PRODUCT. QUALITY IS THE SAME.
（略図の寸法は、参考値です。　DIMENSIONS IN DRAWING FOR REFERENCE ONLY.）

FURUNO ELECTRIC CO ., LTD.　05DZ-X-9502

PACKING LIST

05ED-X-9854 -1 1/1

FS-5070T-J/E/J-HK

A-5

NAME	OUTLINE	DESCRIPTION/CODE No.	Q'TY
ユニット UNIT			
送受信部 TRANSCEIVER UNIT	650 / 340 / 198	FS-5070T/HK 000-057-444-00 **	1
工事材料 INSTALLATION MATERIALS		**CP05-10901**	
工事材料 INSTALLATION MATERIALS		CP05-10901 005-965-770-00	1
図書 DOCUMENT			
取扱説明書 OPERATOR'S MANUAL	210 / 297	OM*-56560-* 000-160-500-1* **	1
操作要領書 OPERATOR'S GUIDE	210 / 297	OS*-56560-* 000-160-504-1* **	1
装備要領書 INSTALLATION MANUAL	210 / 297	IM*-56560-* 000-160-502-1* **	1

ｺｰﾄﾞ番号末尾の[**]は、選択品の代表ｺｰﾄﾞを表します。
CODE NUMBER ENDING WITH "**" INDICATES THE CODE NUMBER OF REPRESENTATIVE MATERIAL.

型式/ｺｰﾄﾞ番号が2段の場合、下段より上段に代わる過渡期品であり、どちらかが入っています。 なお、品質は変わりません。
TWO TYPES AND CODES MAY BE LISTED FOR AN ITEM. THE LOWER PRODUCT MAY BE SHIPPED IN PLACE OF THE UPPER PRODUCT. QUALITY IS THE SAME.
(略図の寸法は、参考値です。 DIMENSIONS IN DRAWING FOR REFERENCE ONLY.)

05ED-X-9854

A-6

FURUNO

CODE NO.		05ED-X-9402 -2
TYPE	AT-5000-**	1/1

工事材料表
INSTALLATION MATERIALS

FS-5070(CP05-107**/108**)

番号 NO.	名称 NAME	略図 OUTLINE	型名／規格 DESCRIPTIONS	数量 Q'TY	用途／備考 REMARKS
1	ｹｰﾌﾞﾙ(5P) 5P TWISTED PAIR CABLE	L=10M	05S0309 *10M* CODE NO. 000-106-043-10	1	選択 TO BE SELECTED
2	ｹｰﾌﾞﾙ(5P) 5P TWISTED PAIR CABLE	L=20M	05S0309 *20M* CODE NO. 000-106-044-10	1	選択 TO BE SELECTED
3	ｹｰﾌﾞﾙ(5P) 5P TWISTED PAIR CABLE	L=30M	05S0309 *30M* CODE NO. 000-106-046-10	1	選択 TO BE SELECTED
4	ｹｰﾌﾞﾙ(5P) 5P TWISTED PAIR CABLE	L=40M	05S0309 *40M* CODE NO. 000-106-047-10	1	選択 TO BE SELECTED
5	ｹｰﾌﾞﾙ(5P) 5P TWISTED PAIR CABLE	L=50M	05S0309 *50M* CODE NO. 000-106-048-10	1	選択 TO BE SELECTED
6	ｹｰﾌﾞﾙ(5P) 5P TWISTED PAIR CABLE	L=10M	05S0793-0 *10M* CODE NO. 000-125-984-10	1	選択 TO BE SELECTED
7	ｹｰﾌﾞﾙ(5P) 5P TWISTED PAIR CABLE	L=20M	05S0793-0 *20M* CODE NO. 000-125-986-10	1	選択 TO BE SELECTED
8	ｹｰﾌﾞﾙ(5P) 5P TWISTED PAIR CABLE	L=30M	05S0793-0 *30M* CODE NO. 000-125-987-10	1	選択 TO BE SELECTED
9	ｹｰﾌﾞﾙ(5P) 5P TWISTED PAIR CABLE	L=40M	05S0793-0 *40M* CODE NO. 000-125-988-10	1	選択 TO BE SELECTED
10	ｹｰﾌﾞﾙ(5P) 5P TWISTED PAIR CABLE	L=50M	05S0793-0 *50M* CODE NO. 000-125-989-10	1	選択 TO BE SELECTED

型式/ｺｰﾄﾞ番号が２段の場合、下段より上段に代わる過渡期品であり、どちらかが入っています。 なお、品質は変わりません。
TWO TYPES AND CODES MAY BE LISTED FOR AN ITEM. THE LOWER PRODUCT MAY BE SHIPPED IN PLACE OF THE UPPER PRODUCT. QUALITY IS THE SAME.
(略図の寸法は、参考値です。 DIMENSIONS IN DRAWING FOR REFERENCE ONLY.)

☆ FURUNO ELECTRIC CO., LTD.

05ED-X-9402

FURUNO

CODE NO.		05ED-X-9404 -0
TYPE		1/1

工事材料表
INSTALLATION MATERIALS

SSB RADIOTELEPHONE

FS-5070

番号 NO.	名称 NAME	略図 OUTLINE	型名／規格 DESCRIPTIONS	数量 Q'TY	用途／備考 REMARKS
1	ｹｰﾌﾞﾙ組品 CABLE ASSY.	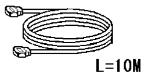	17JE23150-02(D8C) 10M CODE NO. 000-146-016-00	1	選択 TO BE SELECTED
2	ｹｰﾌﾞﾙ組品 CABLE ASSY.	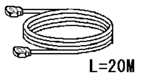	17JE23150-02(D8C) 20M CODE NO. 000-146-017-00	1	選択 TO BE SELECTED
3	ｹｰﾌﾞﾙ組品 CABLE ASSY.	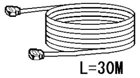	17JE23150-02(D8C) 30M CODE NO. 000-146-018-00	1	選択 TO BE SELECTED
4	ｹｰﾌﾞﾙ組品 CABLE ASSY.	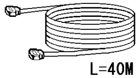	17JE23150-02(D8C) 40M CODE NO. 000-146-019-00	1	選択 TO BE SELECTED
5	ｹｰﾌﾞﾙ組品 CABLE ASSY.	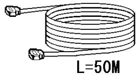	17JE23150-02(D8C) 50M CODE NO. 000-146-020-00	1	選択 TO BE SELECTED

型式/ｺｰﾄﾞ番号が２段の場合、下段より上段に代わる過渡期品であり、どちらかが入っています。　なお、品質は変わりません。

TWO TYPES AND CODES MAY BE LISTED FOR AN ITEM. THE LOWER PRODUCT MAY BE SHIPPED IN PLACE OF THE UPPER PRODUCT. QUALITY IS THE SAME.
（略図の寸法は、参考値です。 DIMENSIONS IN DRAWING FOR REFERENCE ONLY.）

FURUNO

CODE NO.	005-965-770-00	05ED-X-9401 -3
TYPE	CP05-10901	1/1

工事材料表
INSTALLATION MATERIALS

番号 NO.	名称 NAME	略図 OUTLINE	型名／規格 DESCRIPTIONS	数量 Q'TY	用途／備考 REMARKS
1	ｺﾈｸﾀ (17JE) CONNECTOR	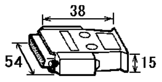	17JE-23250-02(D8C) CODE NO. 000-156-341-10	1	
2	+ﾄﾗｽﾀｯﾋﾟﾝﾈｼﾞ 1ｼｭ SELF-TAPPING SCREW	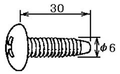	6X30 SUS304 CODE NO. 000-162-614-10	6	
3	ｺﾈｸﾀ (M) COAXIAL CONNECTOR *M TYPE*	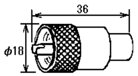	GSC-100/MP-7 CODE NO. 000-166-977-10	3	
4	ﾎﾟﾘｶﾜｯｼｬｰ POLYCARBONATE WASHER		M6 P.C CODE NO. 000-168-259-10	6	

型式/ｺｰﾄﾞ番号が２段の場合、下段より上段に代わる過渡期品であり、どちらかが入っています。　なお、品質は変わりません。

TWO TYPES AND CODES MAY BE LISTED FOR AN ITEM. THE LOWER PRODUCT MAY BE SHIPPED IN PLACE OF THE UPPER PRODUCT. QUALITY IS THE SAME.
（略図の寸法は、参考値です。 DIMENSIONS IN DRAWING FOR REFERENCE ONLY.）

FURUNO

CODE NO.	005-964-760-00	05ED-X-9301 -1 1/1
TYPE	SP05-05601	BOX NO. P

SHIP NO.	SPARE PARTS LIST FOR	U S E	SETS PER VESSEL

ITEM NO.	NAME OF PART	OUTLINE	DWG. NO. OR TYPE NO.	QUANTITY WORKING PER SET	QUANTITY WORKING PER VES	SPARE	REMARKS/CODE NO.
1	TR(RF POWER) TRANSISTOR	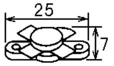	SD1407			8	000-164-939-10

MFR'S NAME	FURUNO ELECTRIC CO.,LTD.	DWG NO.	05ED-X-9301	1/1

（略図の寸法は、参考値です。 DIMENSIONS IN DRAWING FOR REFERENCE ONLY.）

型式/ｺｰﾄﾞ番号が２段の場合、下段より上段に代わる過渡期品であり、どちらかが入っています。 なお、品質は変わりません。
TWO TYPES AND CODES MAY BE LISTED FOR AN ITEM. THE LOWER PRODUCT MAY BE SHIPPED IN PLACE OF THE UPPER PRODUCT. QUALITY IS THE SAME.

FURUNO

CODE NO.	000-043-257-00	16AC-X-9404 -4
TYPE	CP16-00500	1/1

工事材料表

INSTALLATION MATERIALS

PP-510

番号 NO.	名称 NAME	略図 OUTLINE	型名／規格 DESCRIPTIONS	数量 Q'TY	用途／備考 REMARKS
1	ﾊﾘﾏｰｸ(INMAR) LABEL (INMAR)	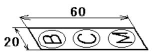	16-007-6919-0 ROHS CODE NO. 100-217-010-10	1	
2	ﾊﾘﾏｰｸ LABEL	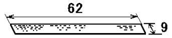	16-007-6927-0 ROHS 16-007-6927-0 CODE NO. 100-222-480-10 100-222-480-00	1	
3	変換ｹｰﾌﾞﾙ COUPLING CABLE	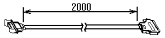	16S0083-0 CODE NO. 000-132-614-00	1	
4	ｹｰﾌﾞﾙ組品 POWER CABLE ASSY.	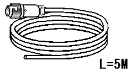	16S0084-0 CODE NO. 000-159-709-10	1	
5	ｹｰﾌﾞﾙ組品 CABLE ASSY.	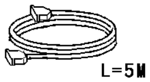	57FE-336-205W CODE NO. 000-566-966-00	1	
6	+ﾄﾗｽﾀｯﾋﾟﾝﾈｼﾞ 1ｼｭ SELF-TAPPING SCREW	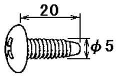	5X20 SUS304 CODE NO. 000-162-608-10	4	
7	ﾌﾟﾘﾝﾀ取付板(1)組品 PRINTER FIXTURE	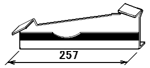	CP16-00501 CODE NO. 004-434-400-00	1	
8	ﾌﾟﾘﾝﾀ取付板(2)組品 PRINTER FIXTURE	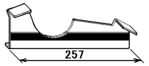	CP16-00502 CODE NO. 004-434-410-00	1	

型式/ｺｰﾄﾞ番号が２段の場合、下段より上段に代わる過渡期品であり、どちらかが入っています。 なお、品質は変わりません。
TWO TYPES AND CODES MAY BE LISTED FOR AN ITEM. THE LOWER PRODUCT MAY BE SHIPPED IN PLACE OF THE UPPER PRODUCT. QUALITY IS THE SAME.
（略図の寸法は、参考値です。 DIMENSIONS IN DRAWING FOR REFERENCE ONLY.）

FURUNO ELECTRIC CO., LTD.

16AC-X-9404

FURUNO

CODE NO.	005-954-180-00	05BP-X-9407 -5
TYPE	CP05-09010	1/1

工事材料表

INSTALLATION MATERIALS

SSB RADIOTELEPHONE

FS-1570/2570/5070

番号 NO.	名称 NAME	略図 OUTLINE	型名／規格 DESCRIPTIONS	数量 Q'TY	用途／備考 REMARKS
1	ｱｰｽ銅板＊鉄付＊ EARTH PLATE	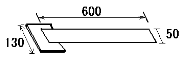	0.4X50X600MM CODE NO. 000-170-971-10	1	
2	ｼｬｯｸﾙ SHACKLE	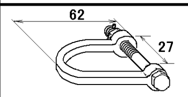	M5号 ｼﾝﾁｭｳ CODE NO. 000-572-251-00	4	
3	ｼﾝﾌﾞﾙ THIMBLE	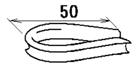	NO10S ｽﾃﾝﾚｽ CODE NO. 000-572-253-00	2	
4	ﾜｲﾔｰｸﾘｯﾌﾟ WIRE CLIP	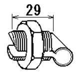	PBC-3 CODE NO. 000-167-979-10	10	
5	波型碍子 STRAIN INSULATOR	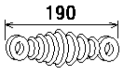	YT-180 #18 CODE NO. 000-166-342-10	1	
6	ｱﾝﾃﾅｾﾝ ANTENNA WIRE	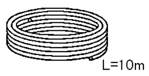	7/1.6 *10M* CODE NO. 000-159-159-10	1	

型式/ｺｰﾄﾞ番号が２段の場合、下段より上段に代わる過渡期品であり、どちらかが入っています。　なお、品質は変わりません。

TWO TYPES AND CODES MAY BE LISTED FOR AN ITEM. THE LOWER PRODUCT MAY BE SHIPPED IN PLACE OF THE UPPER PRODUCT.
QUALITY IS THE SAME.
（略図の寸法は、参考値です。　DIMENSIONS IN DRAWING FOR REFERENCE ONLY.）

FURUNO

CODE NO.	005-964-410-00	05BP-X-9408 -5
TYPE	CP05-09020	1/1

工事材料表

INSTALLATION MATERIALS

SSB RADIOTELEPHONE

FS-1570/2570/5070

番号 NO.	名称 NAME	略図 OUTLINE	型名／規格 DESCRIPTIONS	数量 Q'TY	用途／備考 REMARKS
1	ｱｰｽ銅板＊鉄付＊ EARTH PLATE	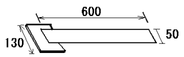	0.4X50X600MM CODE NO. 000-170-971-10	1	
2	ｼｬｯｸﾙ SHACKLE	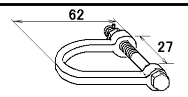	M5号 ｼﾝﾁｭｳ CODE NO. 000-572-251-00	7	
3	ｼﾝﾌﾞﾙ THIMBLE	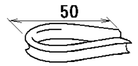	NO10S ｽﾃﾝﾚｽ CODE NO. 000-572-253-00	3	
4	ﾜｲﾔｰｸﾘｯﾌﾟ WIRE CLIP	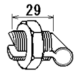	PBC-3 CODE NO. 000-167-979-10	16	
5	波型碍子 STRAIN INSULATOR	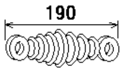	YT-180 #18 CODE NO. 000-166-342-10	2	
6	ｱﾝﾃﾅｾﾝ ANTENNA WIRE	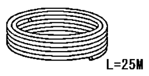	7/1.6 *25M* CODE NO. 000-159-164-10	1	

型式/ｺｰﾄﾞ番号が２段の場合、下段より上段に代わる過渡期品であり、どちらかが入っています。　なお、品質は変わりません。

TWO TYPES AND CODES MAY BE LISTED FOR AN ITEM. THE LOWER PRODUCT MAY BE SHIPPED IN PLACE OF THE UPPER PRODUCT.
QUALITY IS THE SAME.
（略図の寸法は、参考値です。　DIMENSIONS IN DRAWING FOR REFERENCE ONLY.）

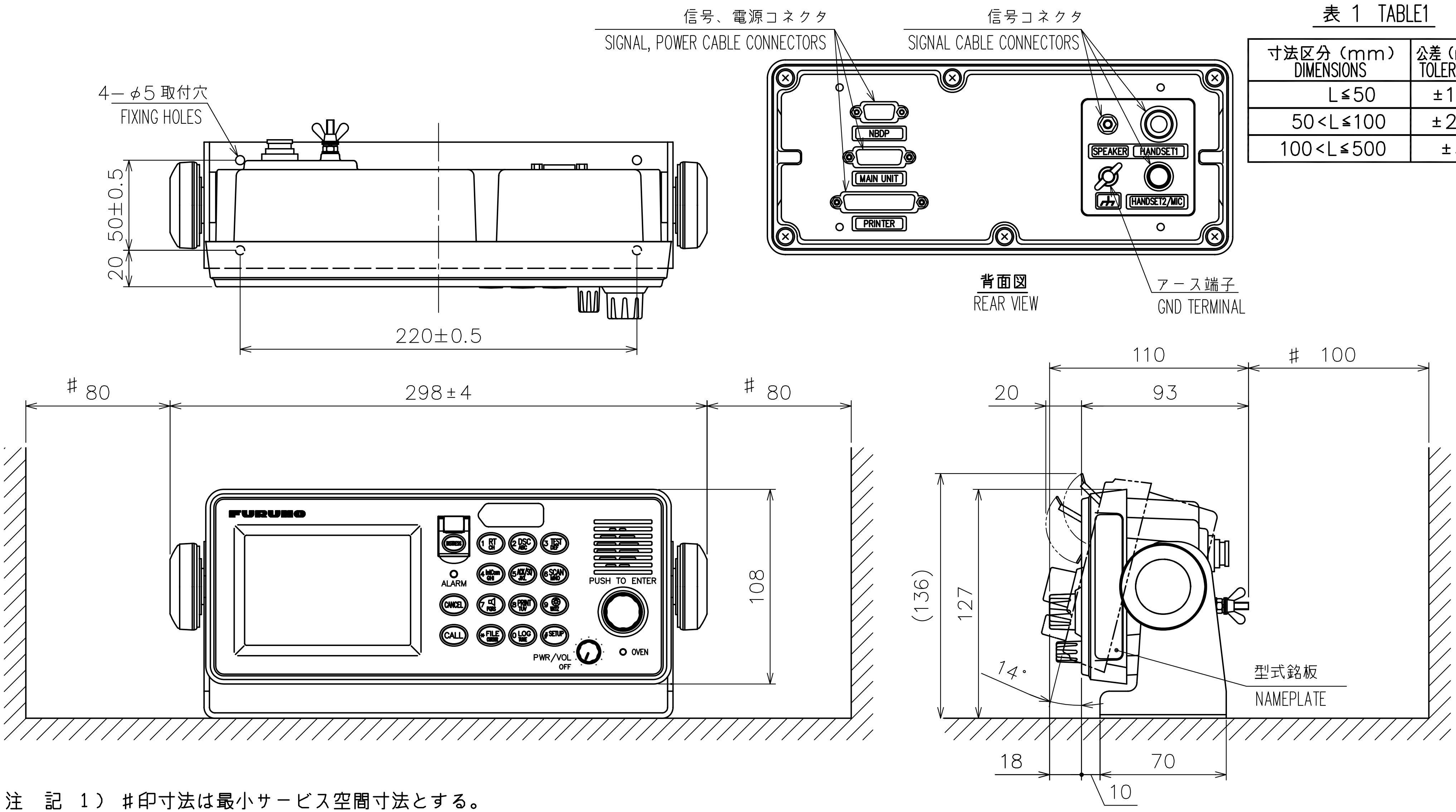

表 1 TABLE1

寸法区分 (mm) DIMENSIONS	公差 (mm) TOLERANCE
L≦50	±1.5
50<L≦100	±2.5
100<L≦500	±3

注　記　1）＃印寸法は最小サービス空間寸法とする。
2）指定外の寸法公差は表１による。
3）取付用ネジは＋トラスタッピンネジ４ｘ１６を使用のこと。

NOTE
1. #: MINIMUM SERVICE CLEARANCE.
2. TABLE 1 INDICATES TOLERANCE OF DIMENSIONS WHICH IS NOT SPECIFIED.
3. USE SELF-TAPPING SCREWS 4x16 FOR FIXING THE UNIT.

DRAWN	Nov. 20, '06 E. MIYOSHI	TITLE	FS-2571C
CHECKED	TAKAHASHI. T	名称	操作部（卓上装備）
APPROVED	Y. Hatai	FS-5070	外寸図
SCALE 1/3	MASS 1.6 ±10% kg	NAME	CONTROL UNIT (TABLETOP MOUNT)
DWG.No. C5656-G01- A	REF.No. 05-094-100G-3		OUTLINE DRAWING

FURUNO ELECTRIC CO., LTD.

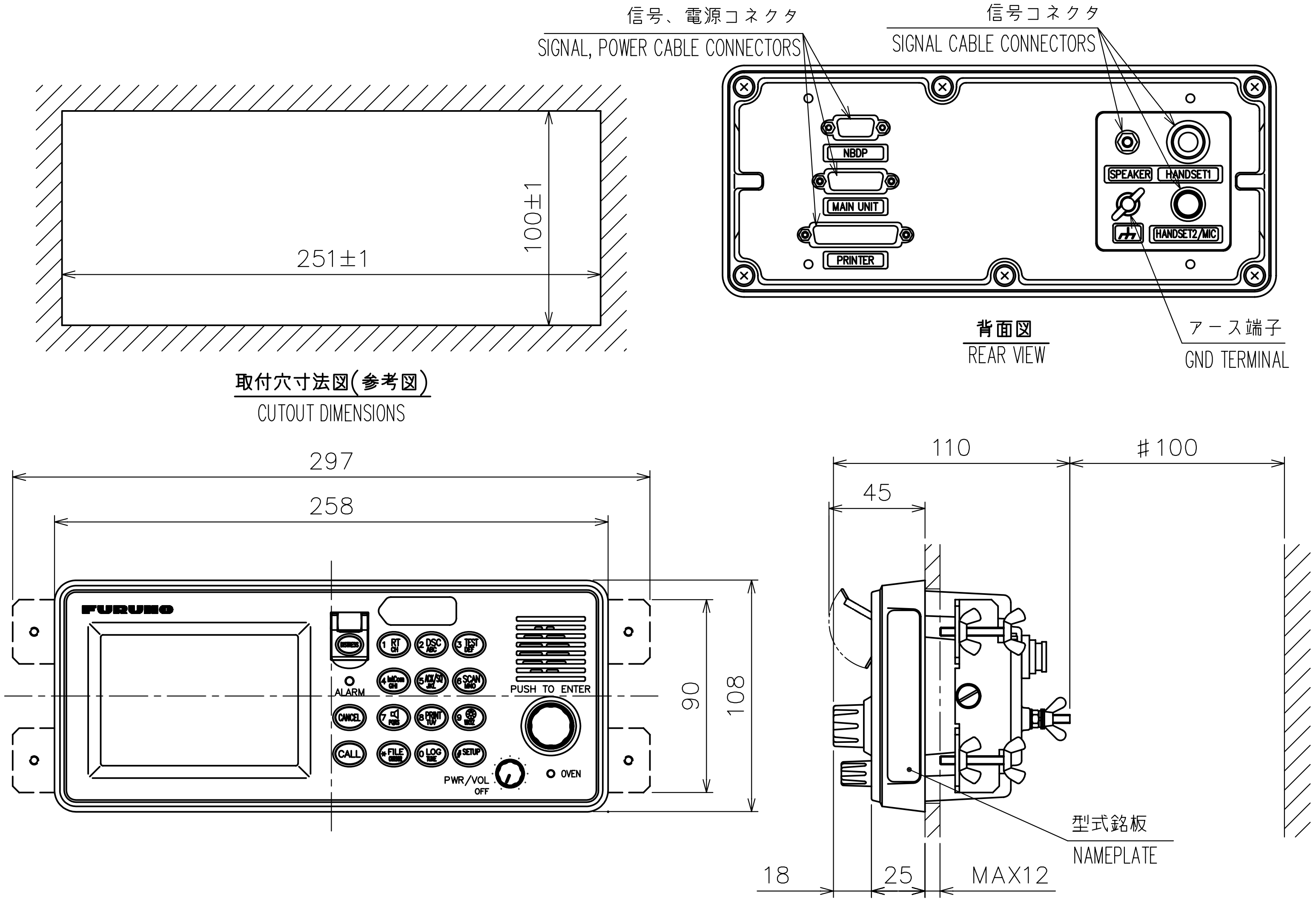

表 1 TABLE1

寸法区分 (mm) DIMENSIONS	公差 (mm) TOLERANCE
L≦50	±1.5
50<L≦100	±2.5
100<L≦500	±3

注 記 1) #印寸法は最小サービス空間寸法とする。
2) 指定外の寸法公差は表1による。

NOTE 1. #: MINIMUM SERVICE CLEARANCE.
2. TABLE 1 INDICATES TOLERANCE OF DIMENSIONS WHICH IS NOT SPECIFIED.

DRAWN	Nov. 20, '06 E. MIYOSHI	TITLE	FS-2571C
CHECKED	TAKAHASHI. T	名称	操作部（埋込装備） 外寸図
APPROVED	Y. Hatai		FS-5070
SCALE	1/3	MASS	1.5 ±10% kg
NAME	CONTROL UNIT (FLUSH MOUNT) OUTLINE DRAWING		
DWG.No.	C5656-G02- A	REF.No.	05-094-110G-3

FURUNO ELECTRIC CO., LTD.

FURUNO

D-3

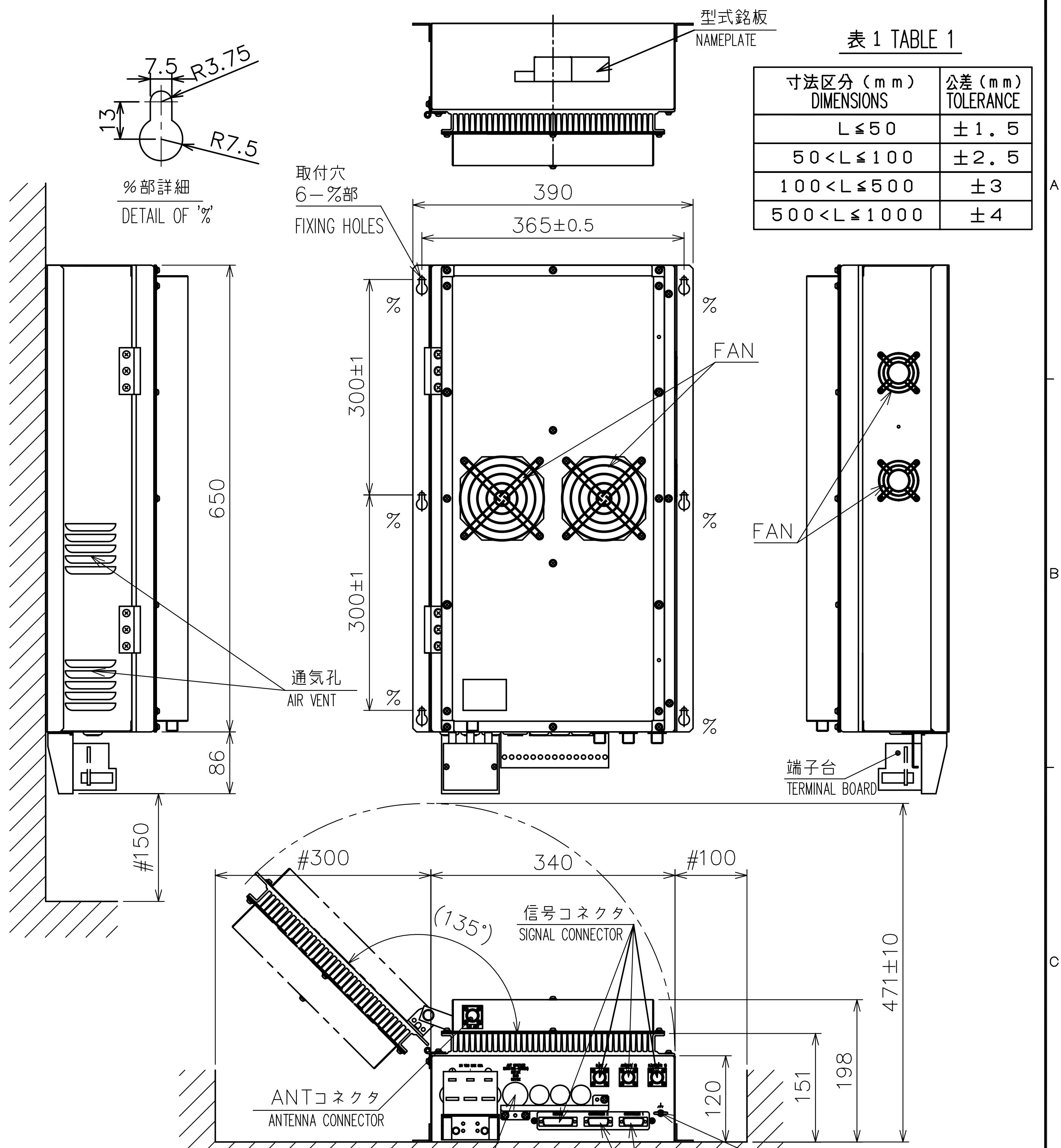

表 1 TABLE 1

寸法区分（ｍｍ） DIMENSIONS	公差（ｍｍ） TOLERANCE
Ｌ≦５０	±１．５
５０＜Ｌ≦１００	±２．５
１００＜Ｌ≦５００	±３
５００＜Ｌ≦１０００	±４

注　記

１）指定外の寸法公差は表１による。

２）＃印寸法は最小サービス空間寸法とする。

３）取付用ネジは＋トラスタッピンネジ６ｘ３０を使用のこと。

NOTE

1. TABLE 1 INDICATES TOLERANCE OF DIMENSIONS WHICH IS NOT SPECIFIED.
2. #: MINIMUM SERVICE CLEARANCE.
3. USE TAPPING SCREWS ø6x30 FOR FIXING THE UNIT.

DRAWN Nov. 21 '06 T.YAMASAKI		TITLE	FS-5070T
CHECKED Nov. 21 '06 T.TAKENO		名称	送受信部（壁掛装備）
APPROVED Nov.22'06 T.Matsuguchi	FS-5070		外寸図
SCALE 1/8	MASS 26 ±10% kg	NAME	TRANSCEIVER UNIT (BULKHEAD MOUNT)
DWG.No. C5656-G03- B	REF.No. 05-094-300G-4		OUTLINE DRAWING

FURUNO ELECTRIC CO., LTD.

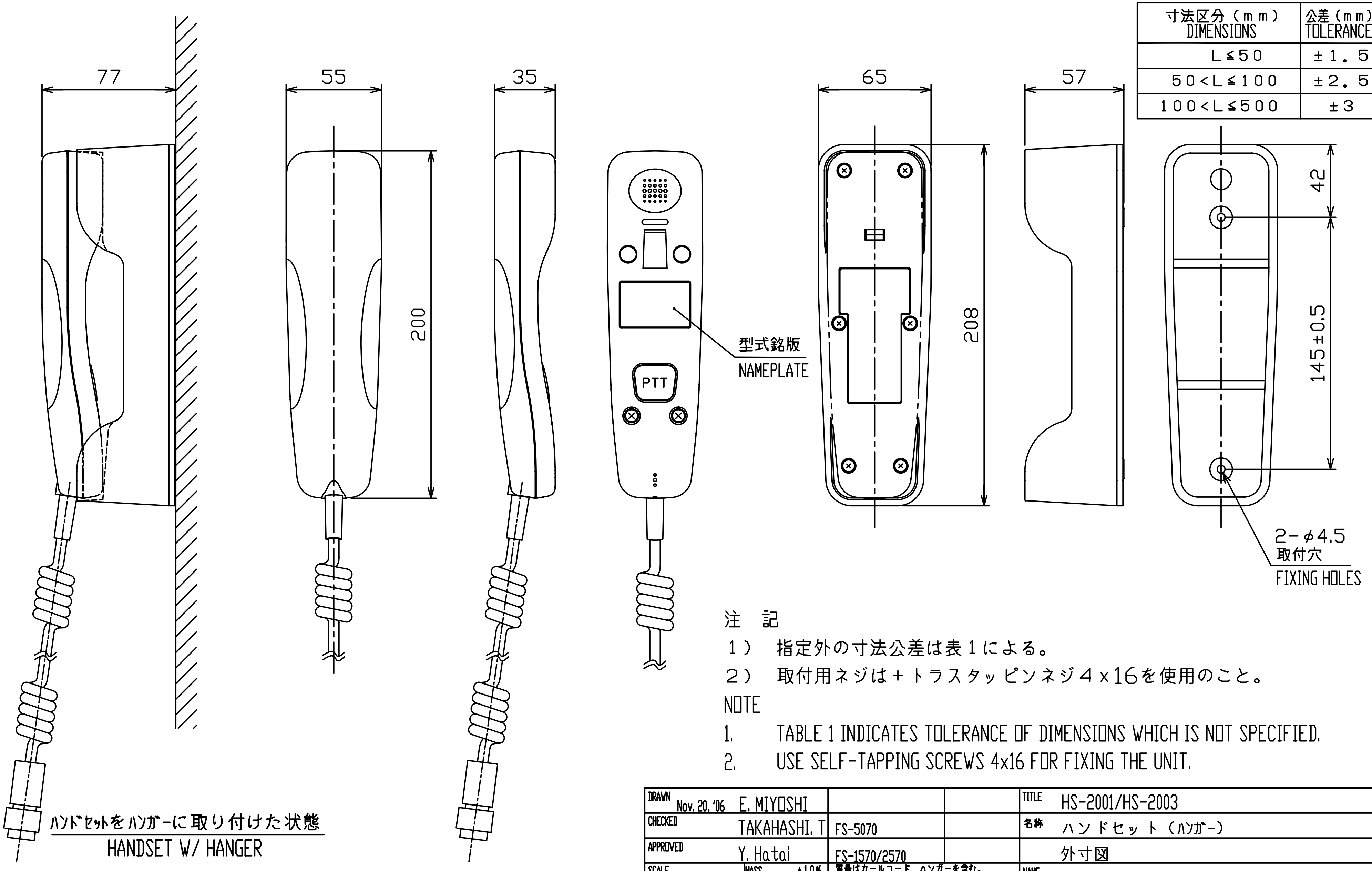

表1 TABLE 1

寸法区分（mm） DIMENSIONS	公差（mm） TOLERANCE
L≦50	±1.5
50<L≦100	±2.5
100<L≦500	±3

注　記

1）　指定外の寸法公差は表1による。

2）　取付用ネジは＋トラスタッピンネジ４x16を使用のこと。

NOTE

1. TABLE 1 INDICATES TOLERANCE OF DIMENSIONS WHICH IS NOT SPECIFIED.
2. USE SELF-TAPPING SCREWS 4x16 FOR FIXING THE UNIT.

DRAWN Nov. 20, '06 E. MIYOSHI		TITLE	HS-2001/HS-2003
CHECKED TAKAHASHI. T	FS-5070	名称	ハンドセット（ﾊﾝｶﾞｰ）
APPROVED Y. Hatai	FS-1570/2570		外寸図
SCALE 1/3　MASS 0.54 kg ±10%	質量はカールコード、ハンガーを含む。 MASS W/ CABLE AND HANGER.	NAME	HANDSET/ HANGER
DWG No. C5636-G04- E	05-089-400G-3		OUTLINE DRAWING

FURUNO ELECTRIC CO., LTD.

D-5

表1 TABLE 1

寸法区分（mm） DIMENSION	公差（mm） TOLERANCE
L≦50	±1.5
50<L≦100	±2.5
100<L≦500	±3

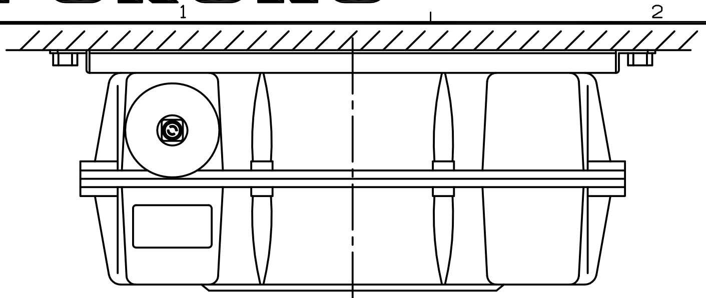

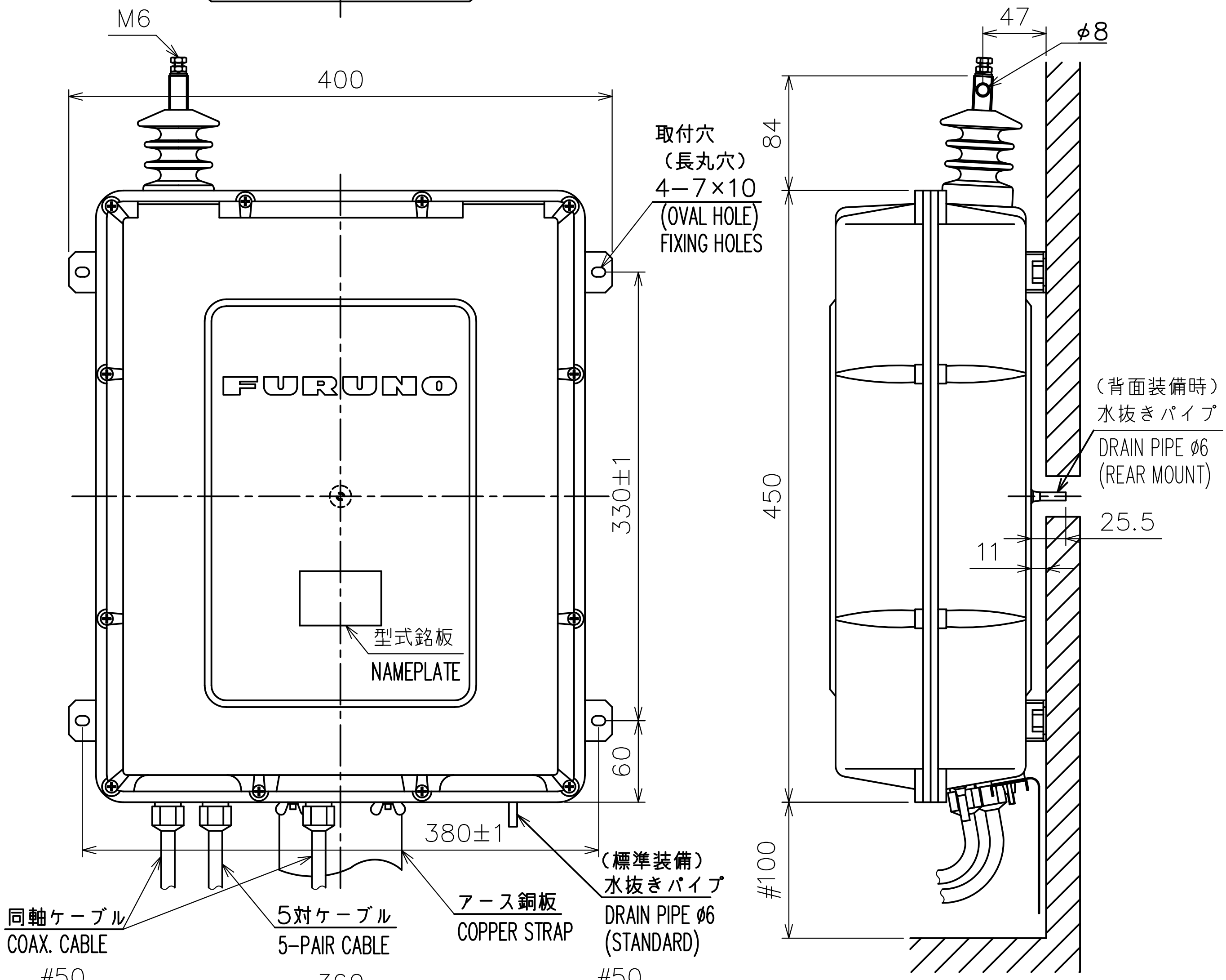

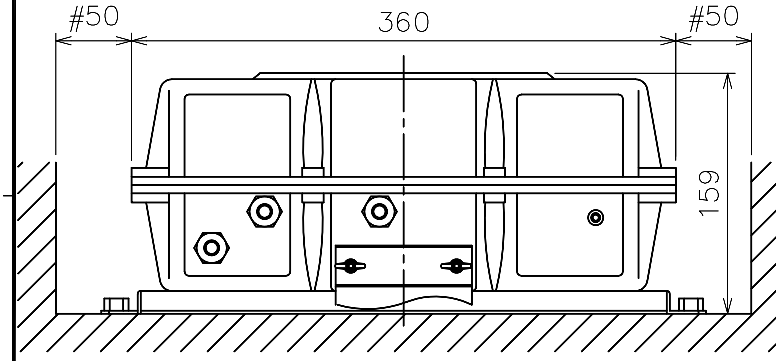

注　記

1） 指定外の寸法公差は表１による。
2） ＃印寸法は最小サービス空間寸法とする。
3） 水抜きパイプは側面（標準装備）または背面の何れかに取り付けてください。
4） 取付にはトラスタッピンネジ呼び径６×２０を使用のこと。

NOTE

1. TABLE 1 INDICATES TOLERANCE OF DIMENSIONS WHICH IS NOT SPECIFIED.
2. #: MINIMUM SERVICE CLEARANCE.
3. MOUNT THE DRAIN PIPE AT BOTTOM (FACTORY MOUNT) OR REAR SIDE DEPENDING ON INSTALLATION METHOD.
4. USE TAPPING SCREWS ø6x20 FOR FIXING THE UNIT.

DRAWN 13/Aug/08 T.YAMASAKI		TITLE	AT-5000H
CHECKED 18/Aug/08 T.TAKENO		名称	アンテナカプラ
APPROVED **21/Aug/08 R.Esumi**	FS-5000/8000/5070		外寸図
SCALE 1/5 / MASS 6.3 ±10% kg		NAME	ANTENNA COUPLER
DWG. No. C5519-G02- G	REF. No. 05-039-063G-2		OUTLINE DRAWING

FURUNO ELECTRIC CO., LTD.

FURUNO

D-6

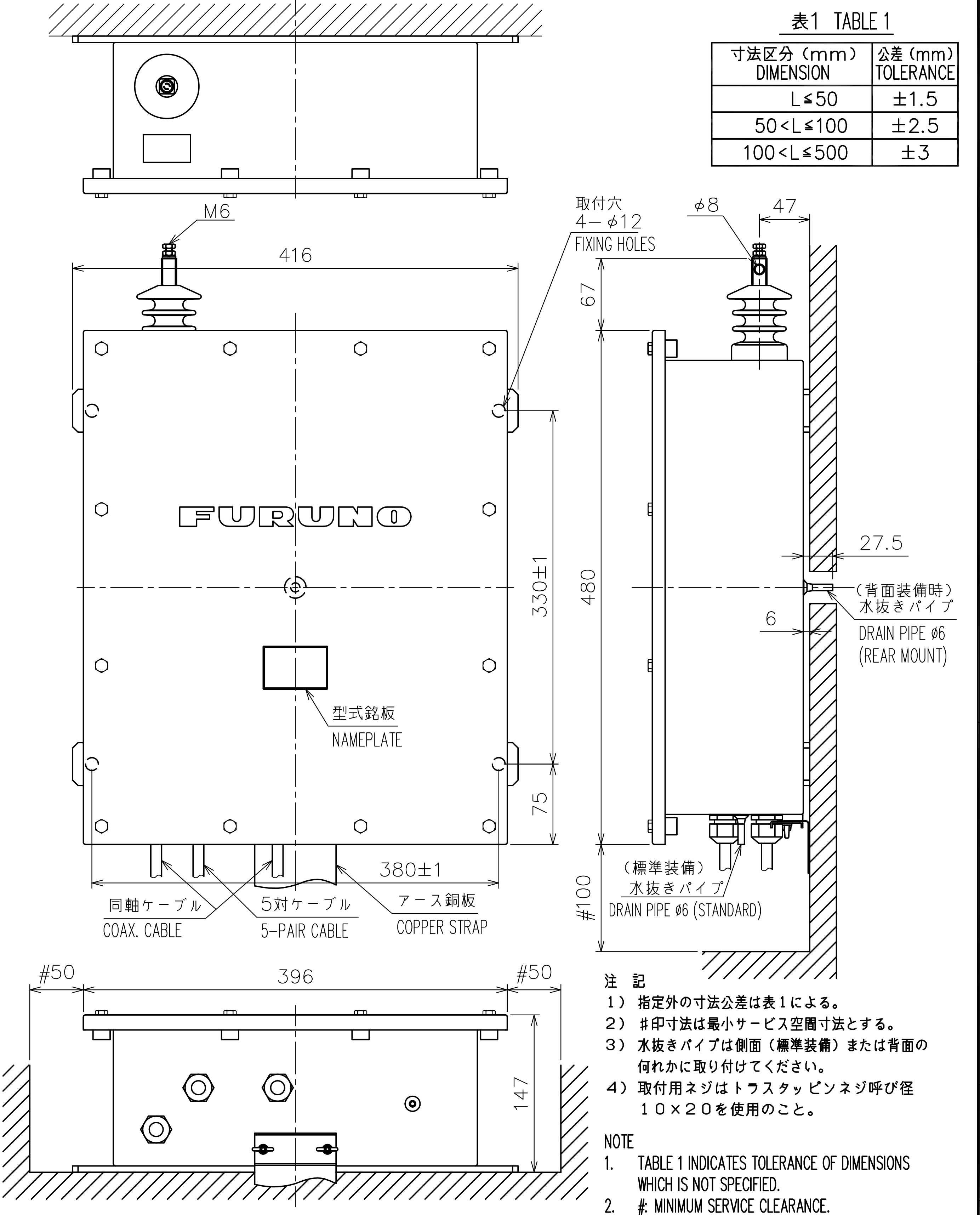

表1 TABLE 1

寸法区分（mm） DIMENSION	公差（mm） TOLERANCE
L≦50	±1.5
50<L≦100	±2.5
100<L≦500	±3

注 記

1） 指定外の寸法公差は表1による。
2） ＃印寸法は最小サービス空間寸法とする。
3） 水抜きパイプは側面（標準装備）または背面の何れかに取り付けてください。
4） 取付用ネジはトラスタッピンネジ呼び径１０×２０を使用のこと。

NOTE

1. TABLE 1 INDICATES TOLERANCE OF DIMENSIONS WHICH IS NOT SPECIFIED.
2. #: MINIMUM SERVICE CLEARANCE.
3. MOUNT THE DRAIN PIPE AT BOTTOM (FACTORY MOUNT) OR REAR SIDE DEPENDING ON INSTALLATION METHOD.
4. USE TAPPING SCREWS ø10x20 FOR FIXING THE UNIT.

DRAWN 13/Aug/08 T.YAMASAKI		TITLE	AT-5000HS
CHECKED 18/Aug/08 T.TAKENO		名称	アンテナカプラ（鋼製）
APPROVED 21/Aug/08 R.Esumi	FS-5000/5070		外寸図
SCALE 1/5	MASS 14.3 ±10% kg	NAME	ANTENNA COUPLER (STAINLESS STEEL)
DWG. No. C5519-G10- F	REF. No. 05-039-065G-0		OUTLINE DRAWING

FURUNO ELECTRIC CO., LTD.

FURUNO

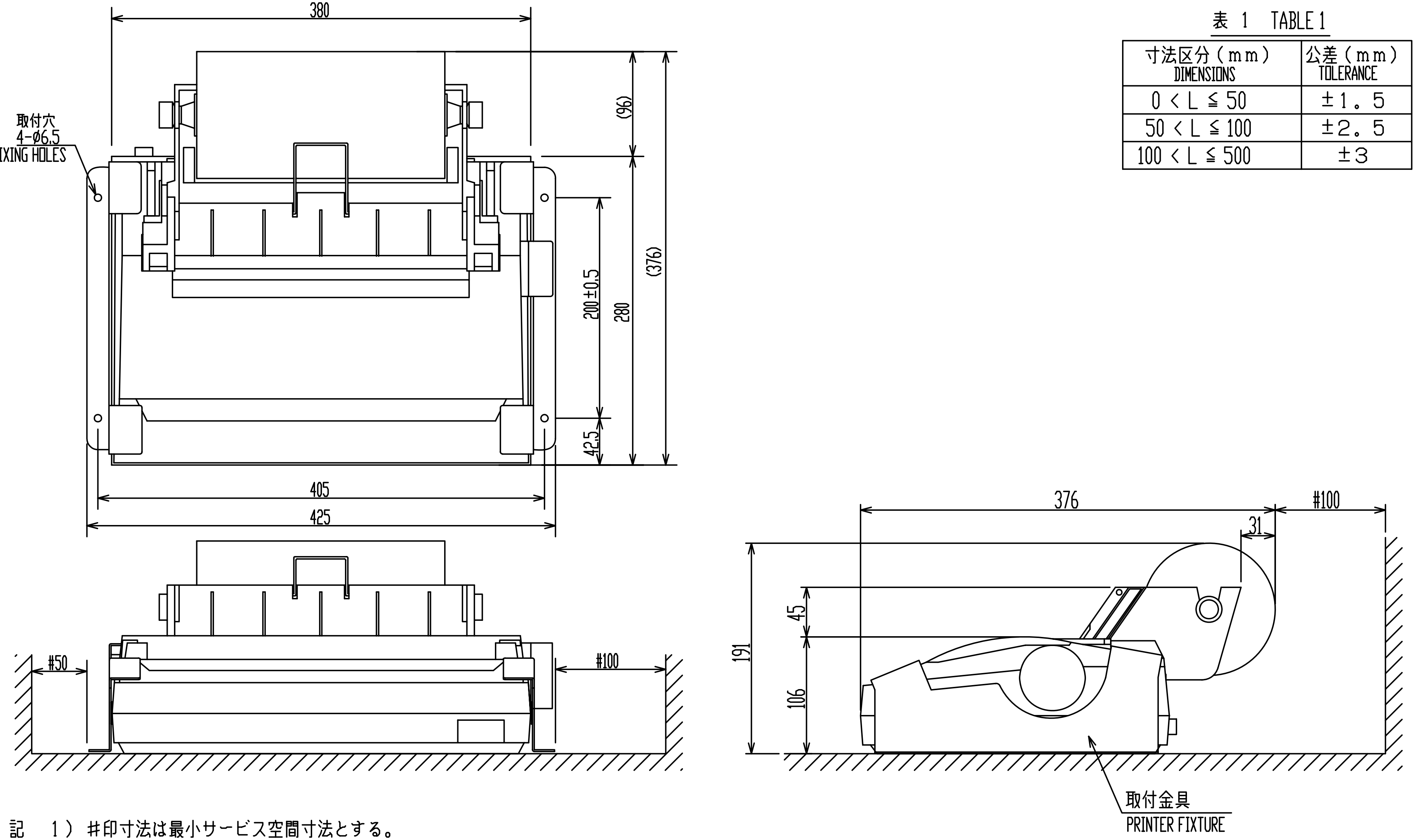

表 1 TABLE 1

寸法区分（mm） DIMENSIONS	公差（mm） TOLERANCE
0 ＜ L ≦ 50	±1．5
50 ＜ L ≦ 100	±2．5
100 ＜ L ≦ 500	±3

注　記　1）＃印寸法は最小サービス空間寸法とする。
2）指定外の寸法公差は表1による。
3）取付用ネジはM6ボルトまたはコーチボルト呼び径6を使用のこと。

NOTE
1. #: MINIMUM SERVICE CLEARANCE.
2. TABLE 1 INDICATES TOLERANCE OF DIMENSIONS WHICH IS NOT SPECIFIED.
3. USE M6 BOLTS OR COACH SCREWS φ6 FOR FIXING THE UNIT.

DRAWN Nov. 27, '06	E. MIYOSHI	TITLE	PP-510
CHECKED	TAKAHASHI. T	名称	プリンタ
APPROVED	Y. Hatai		外寸図
SCALE 1/5	MASS 3.8 ±10% kg	NAME	PRINTER
DWG.No. C5589-G08- K	REF.No. 16-007-660G- 2		OUTLINE DRAWING

FURUNO ELECTRIC CO., LTD.

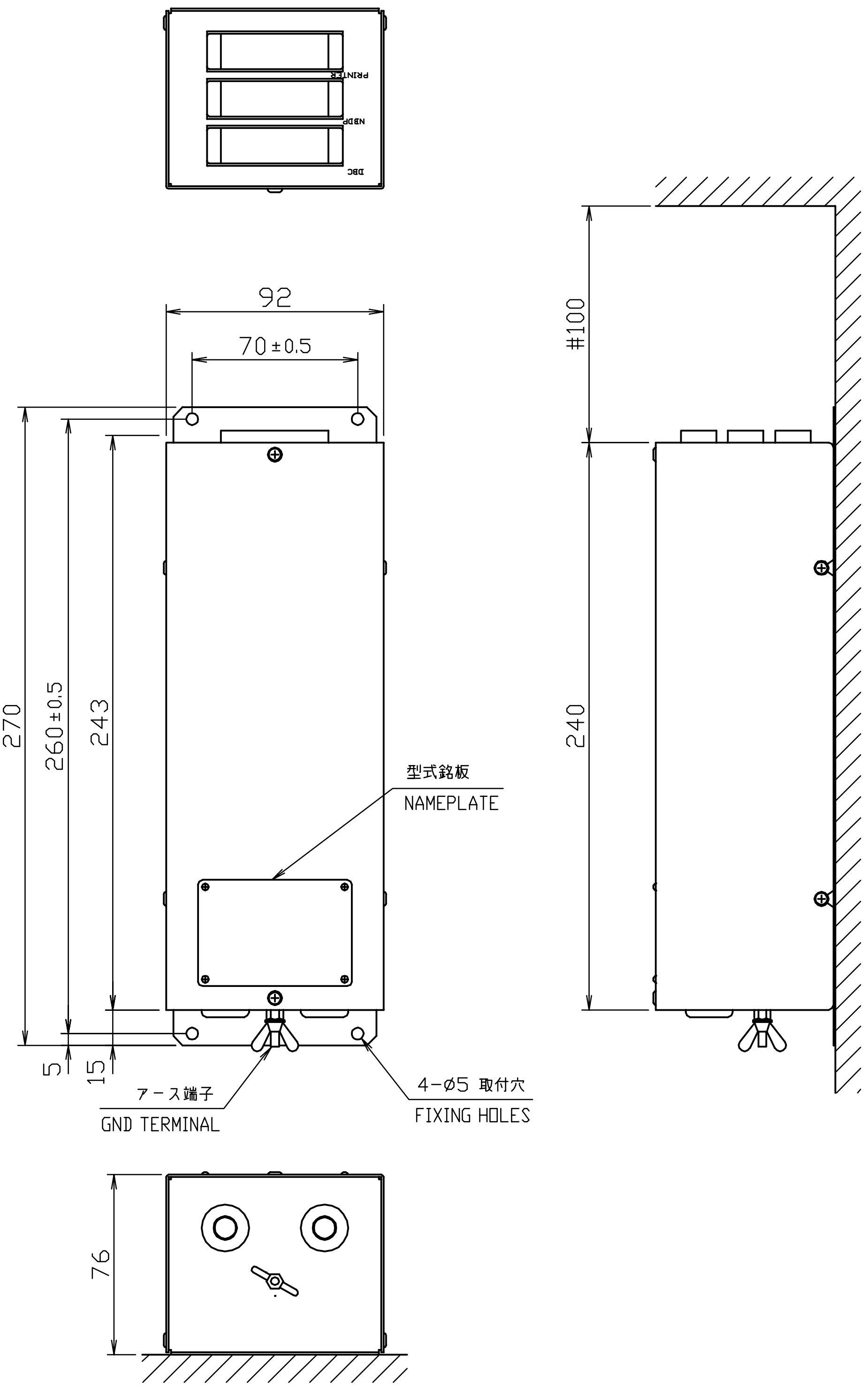

注記

1）指定外の寸法公差は表1による。

2）#印寸法は最小サービス空間寸法とする。

NOTE

1. TABLE 1 INDICATES TOLERANCE OF DIMENSIONS WHICH IS NOT SPECIFIED.

2. #: MINIMUM SERVICE CLEARANCE.

表1 TABLE 1

寸法区分(mm) DIMENSIONS	公差(mm) TOLERANCE
0 < L ≦ 50	±1.5
50 < L ≦ 100	±2.5
100 < L ≦ 500	±3

DRAWN Mar. 7 '06 E. MIYOSHI		TITLE	IF-8500
CHECKED TAKAHASHI. T	FS-5070	名称	プリンタインターフェイス
APPROVED	FS-1570/2570 FM-8500		外寸図
SCALE 1/3	MASS ±10% kg	NAME	PRINTER INTERFACE
DWG.No. C5603-G05- C	REF.No. 05-073-2100-G1		OUTLINE DRAWING

FURUNO ELECTRIC CO., LTD.

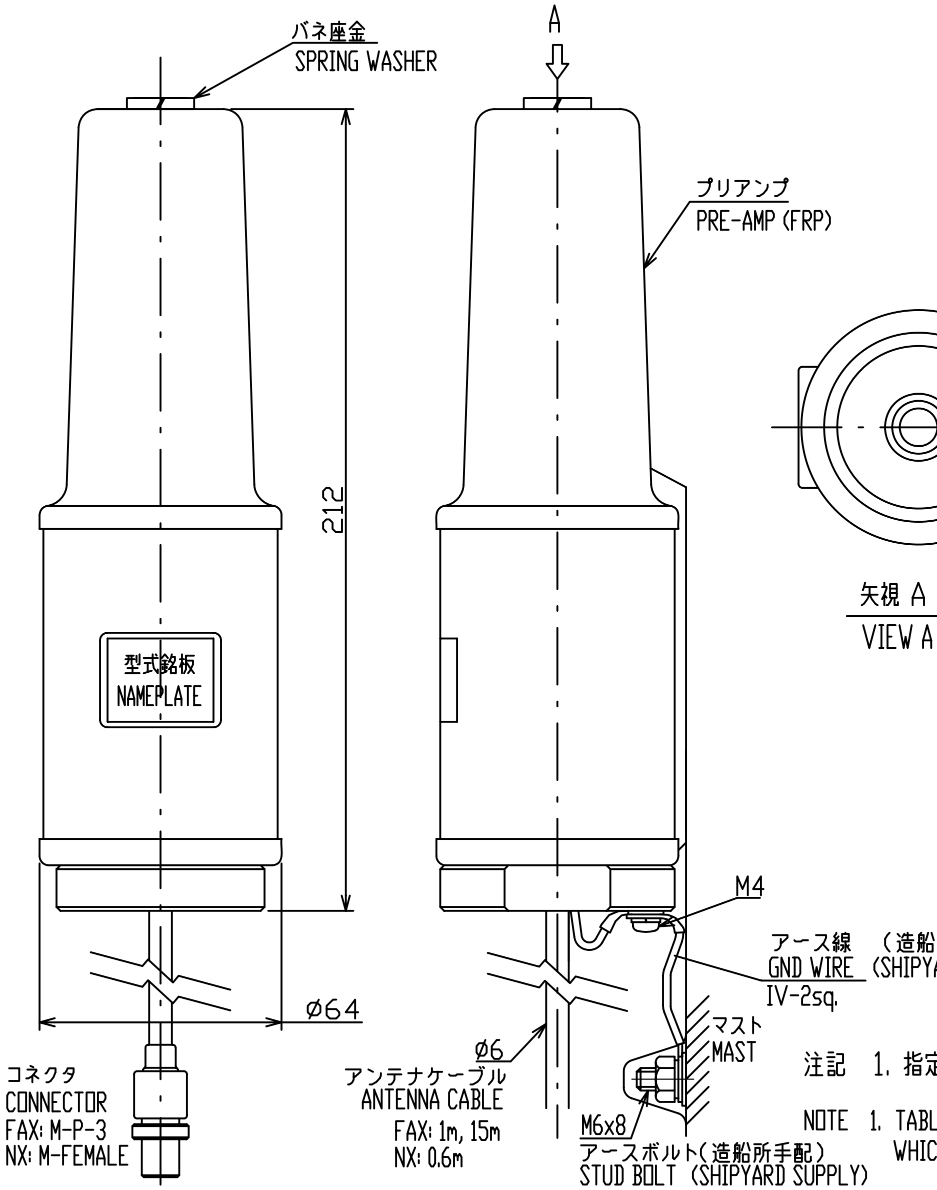

表 1 TABLE 1

寸法範囲 (mm) DIMENSIONS	公差(mm) TOLERANCE
L≦50	±1.5
50<L≦100	±2.5
100<L≦500	±3

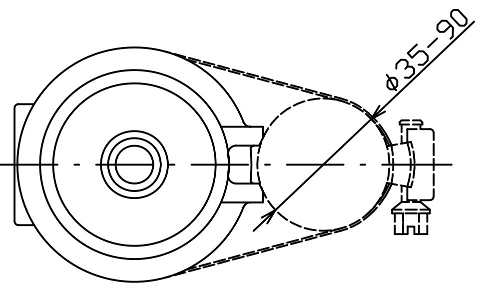

矢視 A
VIEW A

マスト装備時
FOR MAST INSTALLATION

注記 1. 指定外の寸法公差は表1による。

NOTE 1. TABLE 1 INDICATES TOLERANCE OF DIMENSIONS WHICH IS NOT SPECIFIED.

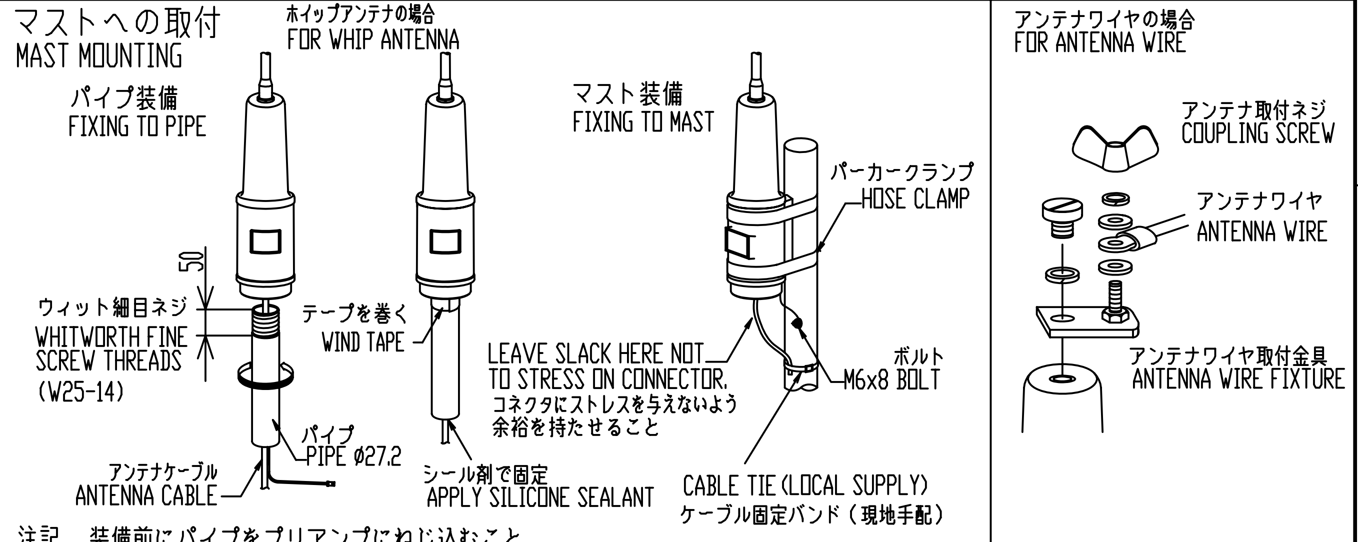

注記 装備前にパイプをプリアンプにねじ込むこと。
NOTE FASTEN PIPE TO ANTENNA BEFORE INSTALLATION.

DRAWN Nov. 20, '06 E. MIYOSHI		TITLE	FAX-5, NX-5/6
CHECKED TAKAHASHI. T	FS-5070 FS-1570/2570	名称	プリアンプ
APPROVED Y. Hatai			外寸図
SCALE 1/2	MASS 0.6 kg ±10% 質量はケーブルを含まず。 MASS W/O CABLE.	NAME	PRE-AMP UNIT
DWG.No. C6244-003- N	REF.No.		OUTLINE DRAWING

FURUNO ELECTRIC CO., LTD.

FURUNO

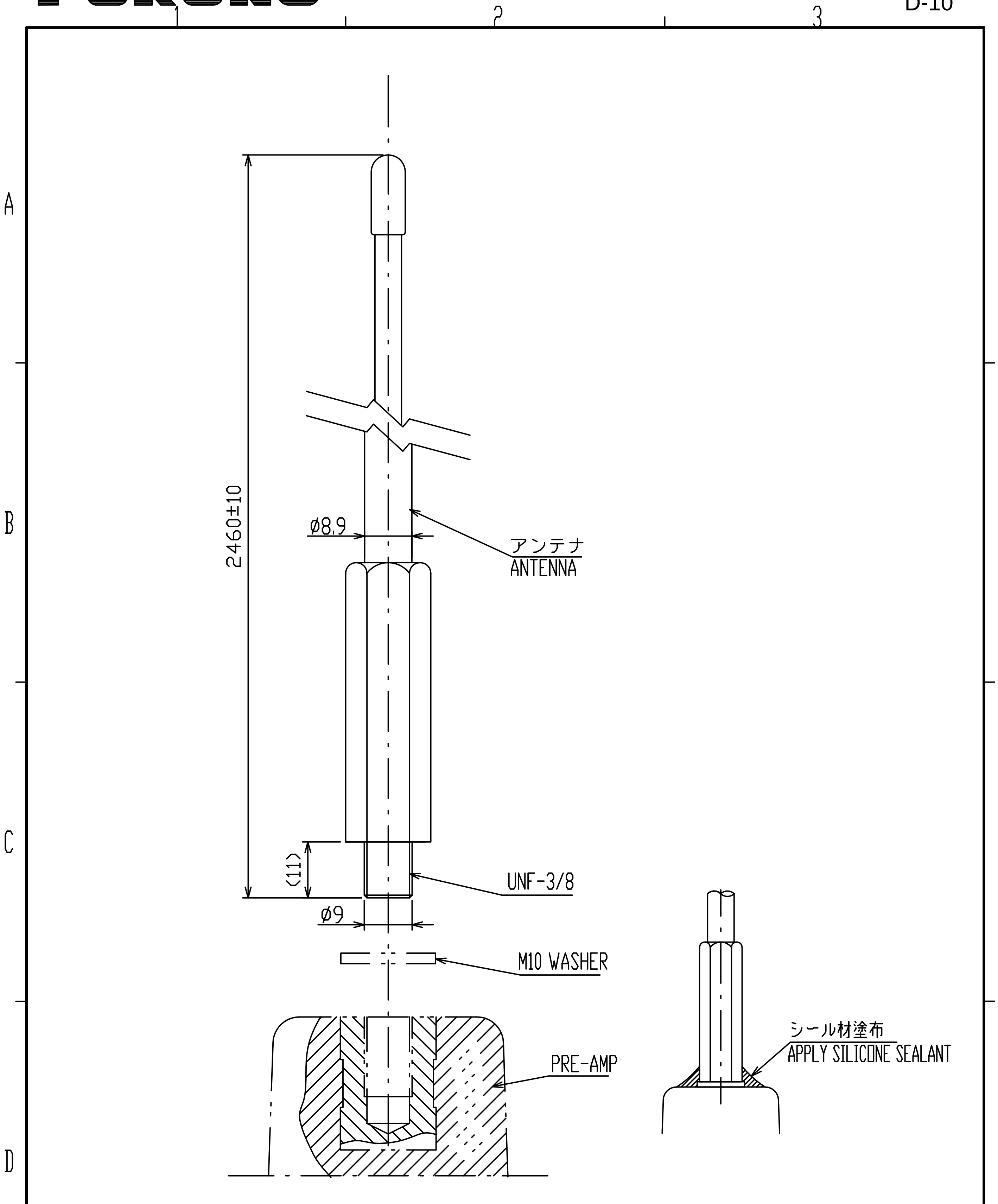

DRAWN 17/Jun/09 T.YAMASAKI		TITLE	04S4176
CHECKED 17/Jun/09 T.TAKENO		名称	2.6m ホイップアンテナ 外寸図
APPROVED **26/Jun/09 R.Esumi**			
SCALE 1/1	MASS 0.5 ±10% kg	NAME	2.6m WHIP ANTENNA OUTLINE DRAWING
DWG.No. C4002-018- J	REF.No.		

FURUNO ELECTRIC CO., LTD.

FURUNO

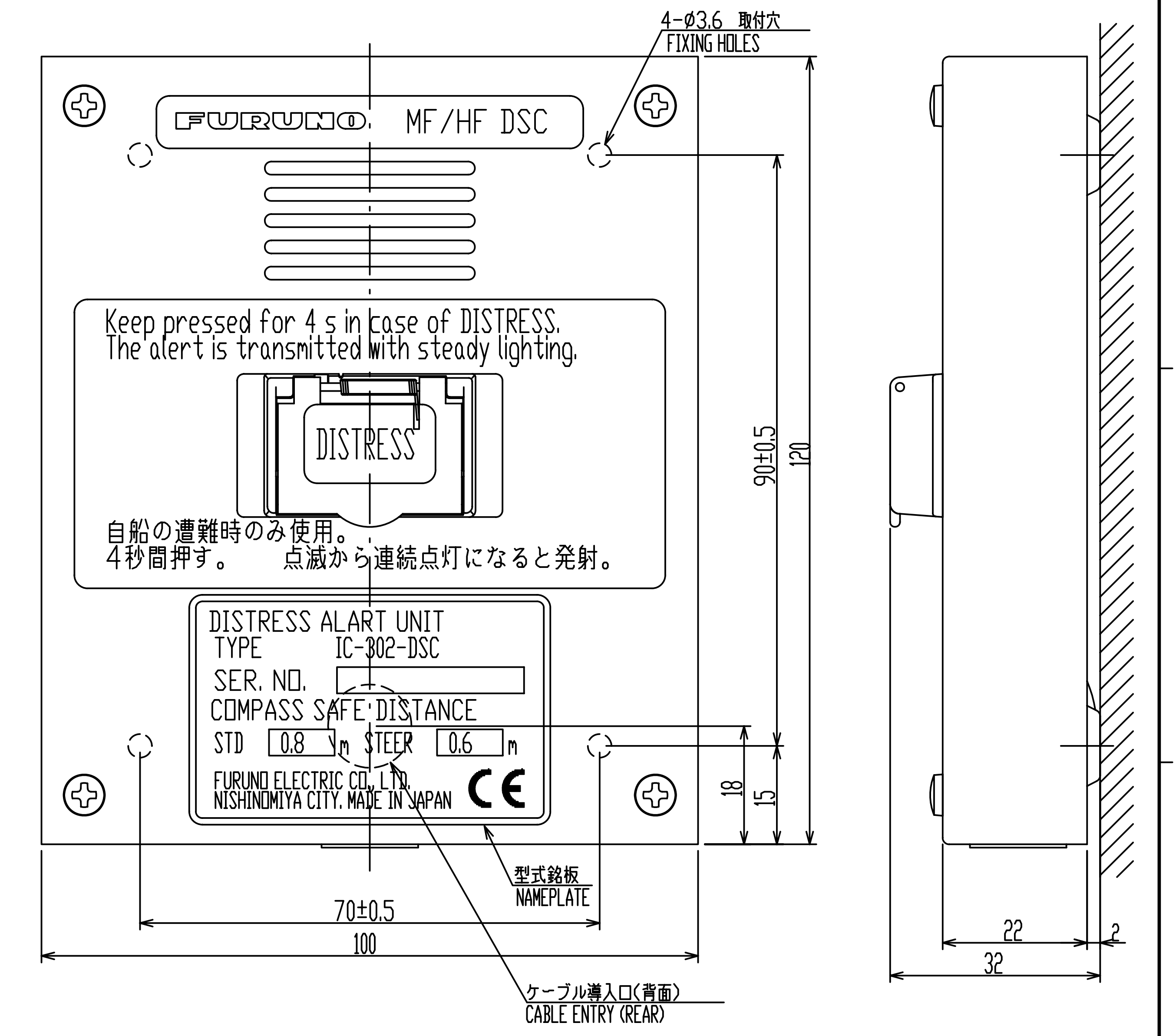

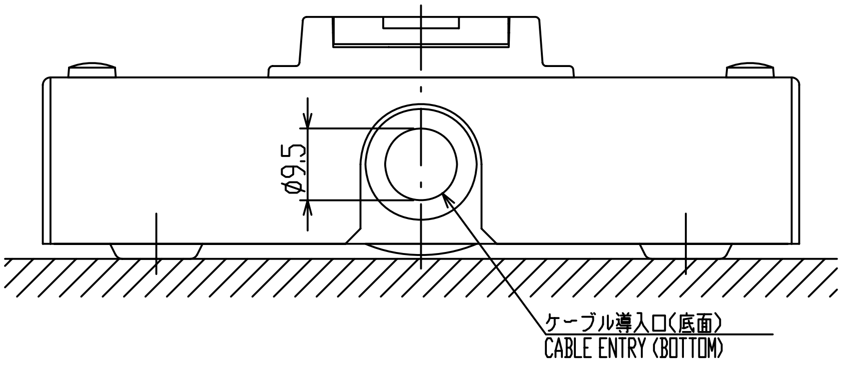

表 1 TABLE 1

寸法区分(mm) DIMENSIONS	公差(mm) TOLERANCE
0 ＜L≦ 50	±1．5
50 ＜L≦ 100	±2．5
100 ＜L≦ 500	±3

注記 1 ）指定外寸法公差は表１による。

NOTE 1. TABLE 1 INDICATES TOLERANCE OF DIMENSIONS WHICH IS NOT SPECIFIED.

DRAWN	Nov. 20, '06 E. MIYOSHI		TITLE	IC-302-DSC
CHECKED	TAKAHASHI. T	FS-5070	名称	遭難警報発呼器
APPROVED	Y. Hatai	FS-1570/2570 DSC-60		外寸図
SCALE 1/1	MASS 0.33 ±10% kg		NAME	DISTRESS ALART UNIT
DWG.No.	C5628-G02- C	REF.No. 16-013-3110-G2		OUTLINE DRAWING

FURUNO ELECTRIC CO., LTD.

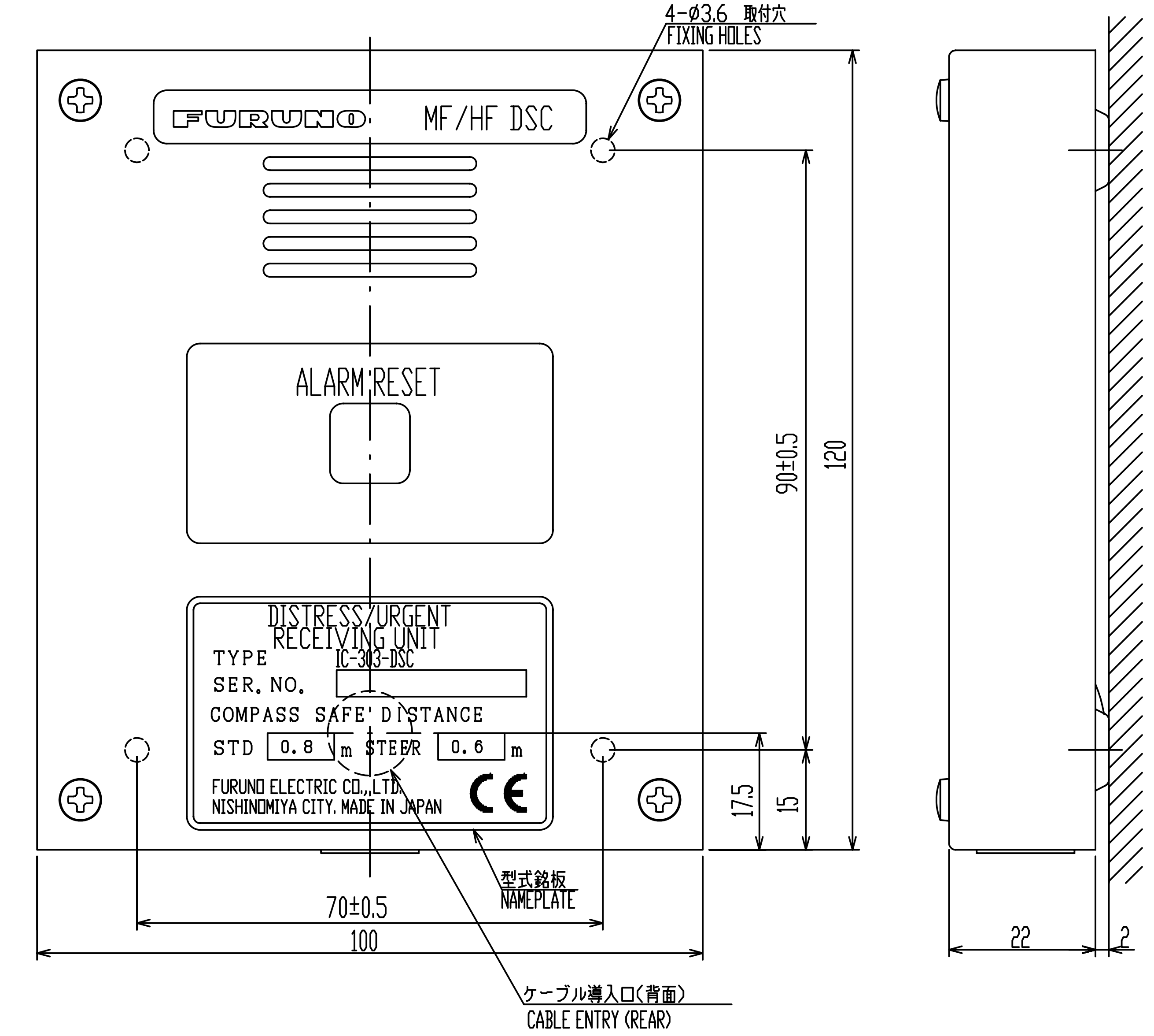

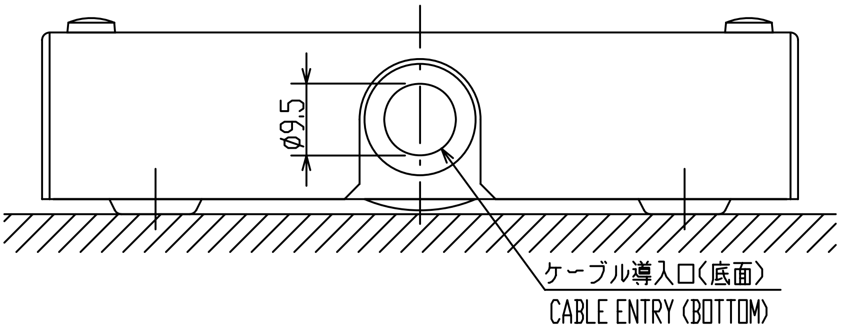

表 1 TABLE 1

寸法区分(mm) DIMENSIONS	公差(mm) TOLERANCE
0 ＜L≦ 50	±1.5
50 ＜L≦ 100	±2.5
100 ＜L≦ 500	±3

注記 1 ）指定外寸法公差は表１による。

NOTE 1. TABLE 1 INDICATES TOLERANCE OF DIMENSIONS WHICH IS NOT SPECIFIED.

DRAWN Nov. 20, '06 E. MIYOSHI		TITLE	IC-303-DSC
CHECKED TAKAHASHI. T	FS-5070	名称	着信指示器（遭難警報用）
APPROVED Y. Hatai	FS-1570/2570 DSC-60		外寸図
SCALE 1/1 MASS 0.33 ±10% kg		NAME	DISTRESS/URGENT RECEIVING UNIT
DWG.No. C5628-G03- C	REF.No. 16-013-3120-G2		OUTLINE DRAWING

FURUNO ELECTRIC CO., LTD.

表1 TABLE 1

寸法区分(mm) DIMENSIONS	公差(mm) TOLERANCE
0 < L ≦ 50	±1.5
50 < L ≦ 100	±2.5
100 < L ≦ 500	±3

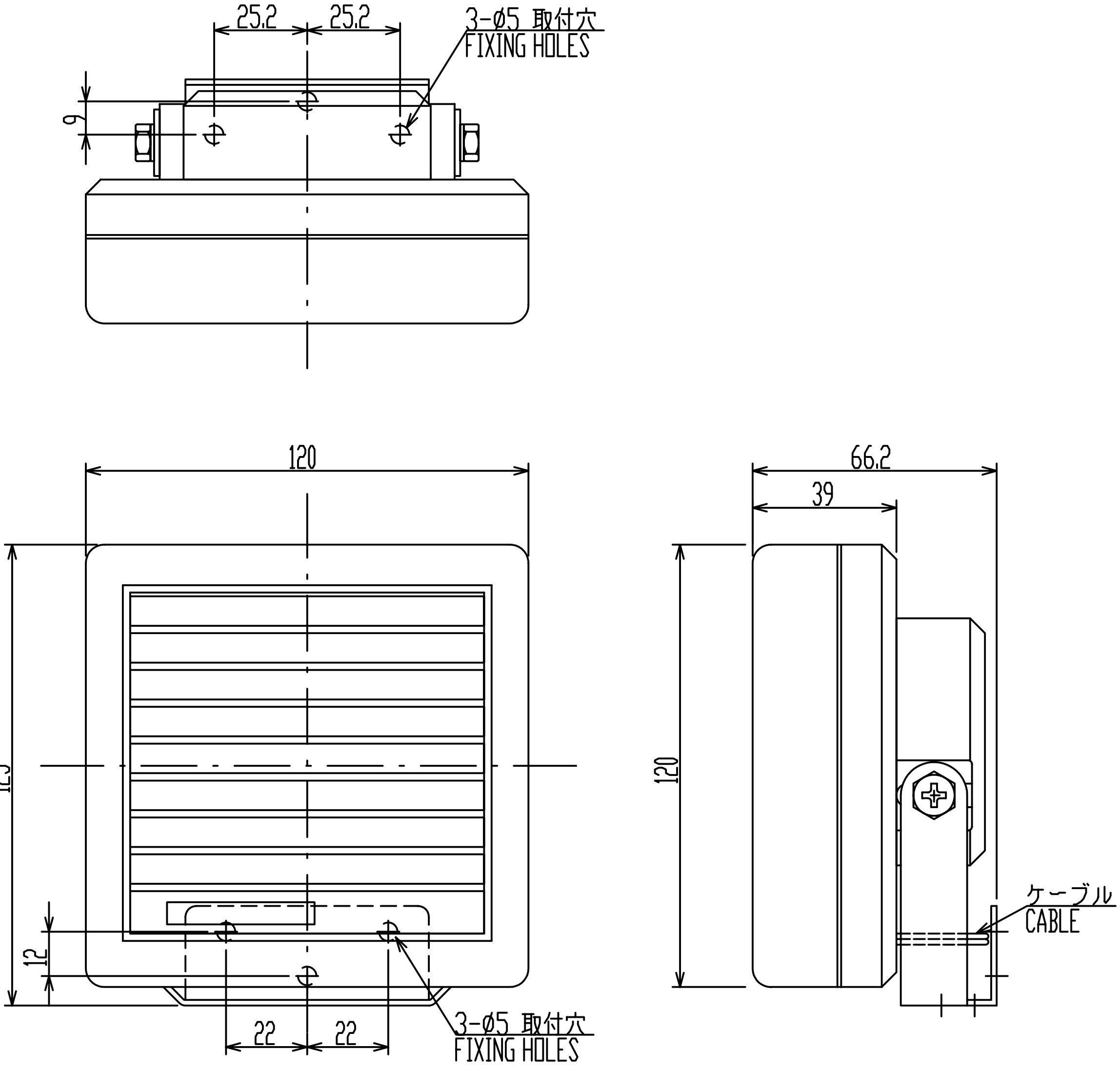

注記 1) 指定外寸法公差は表1による。

NOTE 1. TABLE 1 INDICATES TOLERANCE OF DIMENSIONS WHICH IS NOT SPECIFIED.

DRAWN Nov. 25, '06	E. MIYOSHI		TITLE	SEM-21Q
CHECKED	TAKAHASHI. T		名称	スピーカ
APPROVED	Y. Hatai			外寸図
SCALE 1/2	MASS 0.54 ±10% kg	質量は2.8mケーブルを含む MASS W/ 2.8m CABLE	NAME	LOUDSPEAKER
DWG.No.	C5016-G07- C	REF.No.		OUTLINE DRAWING

FURUNO ELECTRIC CO., LTD.

FURUNO

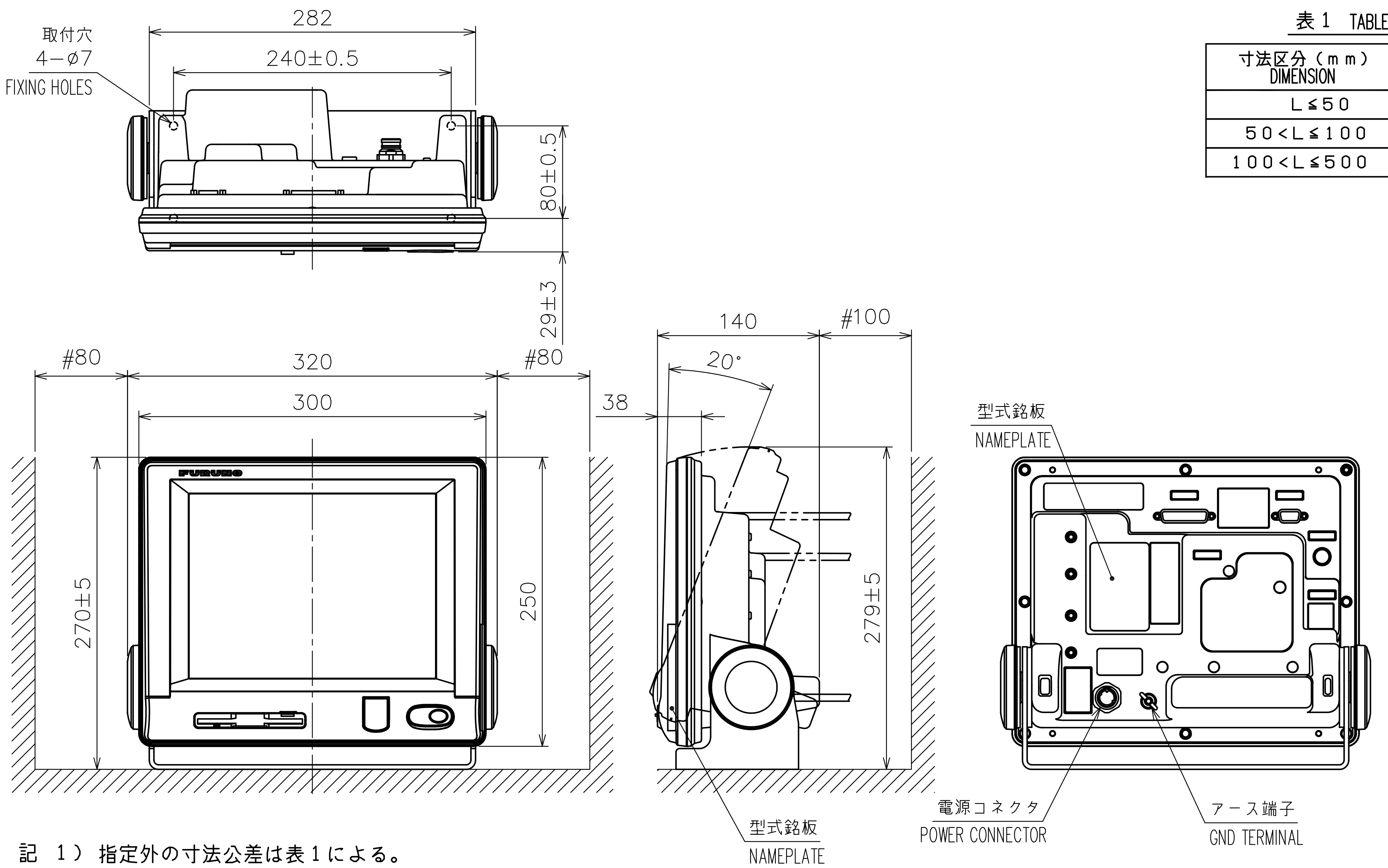

表１　TABLE 1

寸法区分（ｍｍ） DIMENSION	公差（ｍｍ） TOLERANCE
Ｌ≦５０	±１．５
５０＜Ｌ≦１００	±２．５
１００＜Ｌ≦５００	±３

注　記　１）指定外の寸法公差は表１による。
２）＃印寸法は最小サービス空間寸法とする。
３）取付用ネジはトラスタッピンネジ呼び径５×２０を使用のこと。

NOTE
1. TABLE 1 INDICATES TOLERANCE OF DIMENSIONS WHICH IS NOT SPECIFIED.
2. #: MINIMUM SERVICE CLEARANCE.
3. USE TAPPING SCREWS ø5x20 FOR FIXING THE UNIT.

DRAWN 8/Jun/09 T.YAMASAKI		TITLE	IB-583
CHECKED 8/Jun/09 T.TAKENO		名称	ターミナル部（卓上装備）
APPROVED 18/June/09 R.Esumi	FS-1570/2570/5070		外寸図
SCALE 1/5	MASS 4.1 ±10% kg	NAME	TERMINAL UNIT (TABLETOP MOUNT)
DWG. No. C5636-G06- C	REF. No. 05-089-600G-4		OUTLINE DRAWING

FURUNO ELECTRIC CO., LTD.

FURUNO

表 1 TABLE 1

寸法区分（ｍｍ） DIMENSION	公差（ｍｍ） TOLERANCE
Ｌ≦５０	±１．５
５０＜Ｌ≦１００	±２．５
１００＜Ｌ≦５００	±３

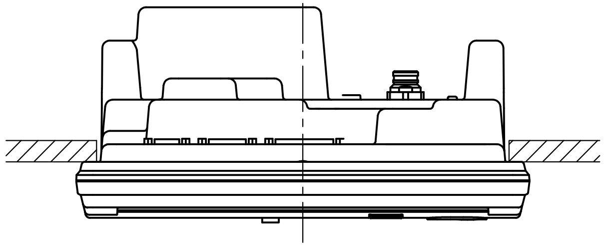

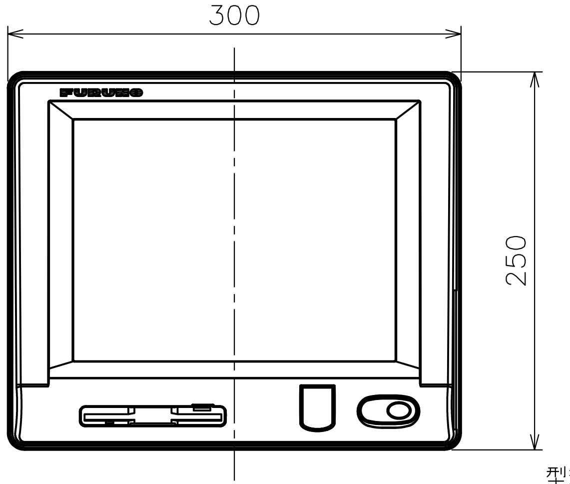

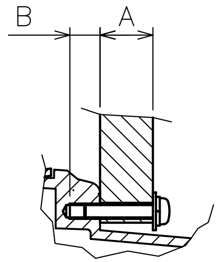

取付ネジ部断面 尺度 1/2
DETAIL FOR FASTENING (SCALE 1/2)

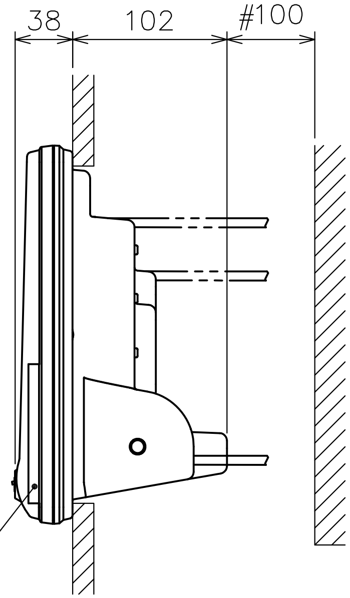

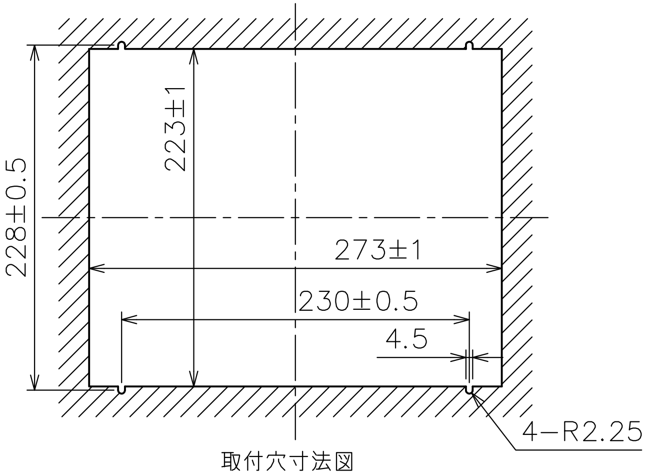

取付穴寸法図
CUTOUT DIMENSIONS

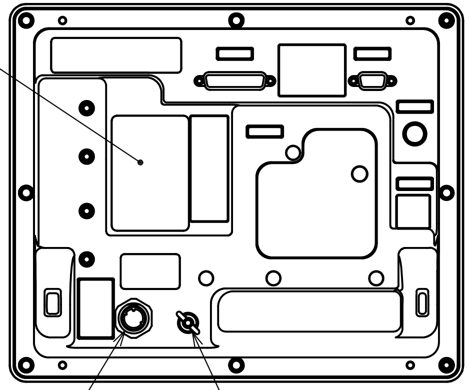

注　記　１）指定外の寸法公差は表１による。
２）＃印寸法は最小サービス空間寸法とする。
３）取付用ネジは、セムスネジＢ　Ｍ４×２０を使用のこと。
壁の厚さ（Ａ）は１１≦Ａ≦１４とする。それ以外の壁に
装備する場合、使用するネジ長さは（Ａ＋７．８）±２とする。
筐体にはネジ部を８ｍｍ以上入れないこと。（Ｂ≦８）

NOTE
1. TABLE 1 INDICATES TOLERANCE OF DIMENSIONS WHICH IS NOT SPECIFIED
2. #: MINIMUM SERVICE CLEARANCE.
3. USE SEMS SCREWS M4x20 FOR FIXING THE UNIT.
THICKNESS A: 11≦A≦14 OR SCREW LENGTH: (A+7.8)±2.
DO NOT FASTEN SCREWS INTO UNIT MORE THAN 8 mm.

DRAWN 8/Jun/09 T.YAMASAKI		TITLE	IB-583
CHECKED 8/Jun/09 T.TAKENO		名称	ターミナル部（埋込装備）
APPROVED 18/June/09 R.Esumi	FS-1570/2570/5070		外寸図
SCALE 1/5 MASS 3.5 ±10% kg		NAME	TERMINAL UNIT (FLUSH MOUNT)
DWG. No. C5636-G07- C	REF. No. 05-089-610G-4		OUTLINE DRAWING

FURUNO ELECTRIC CO., LTD.

表 1 TABLE 1

寸法区分（ｍｍ） DIMENSIONS	公差（ｍｍ） TOLERANCE
Ｌ≦５０	±１．５
５０＜Ｌ≦１００	±２．５
１００＜Ｌ≦５００	±３

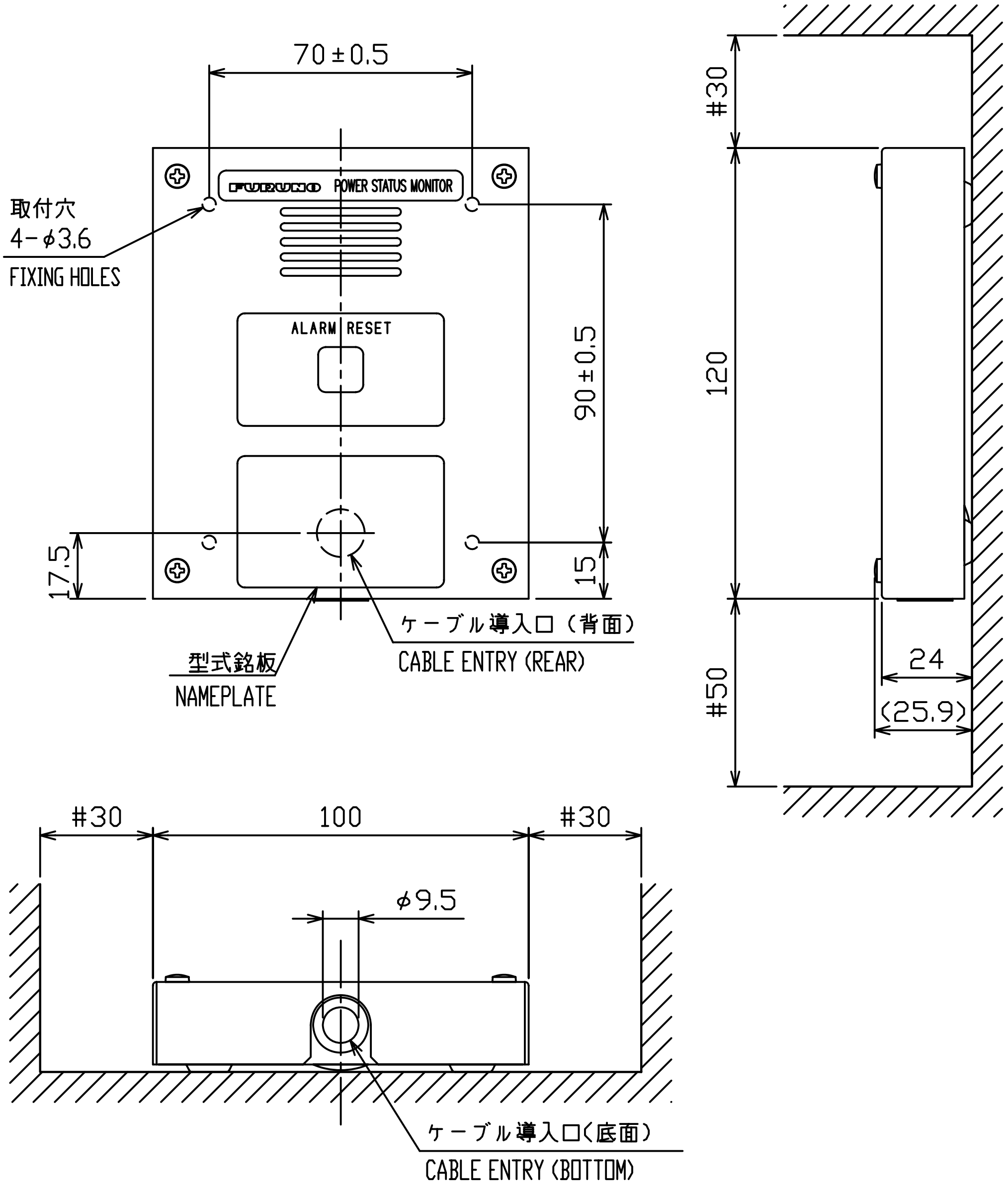

注　記　１）＃印寸法は最小サービス空間寸法とする。
　　　　２）指定外の寸法公差は表１による。

NOTE 1. #: MINIMUM SERVICE CLEARANCE.
2. TABLE 1 INDICATES TOLERANCE OF DIMENSIONS WHICH IS NOT SPECIFIED.

DRAWN Nov. 20, '06 E. MIYOSHI		TITLE	PSM-01
CHECKED TAKAHASHI. T		名称	パワーステータスモニター
APPROVED Y. Hatai	FS-5070 FS-1570/2570		外寸図
SCALE 1/2	MASS 0.33 kg ±10%	NAME	POWER STATUS MONITOR
DWG.No. C5636-G05- B	REF.No. 05-087-196G- 0		OUTLINE DRAWING

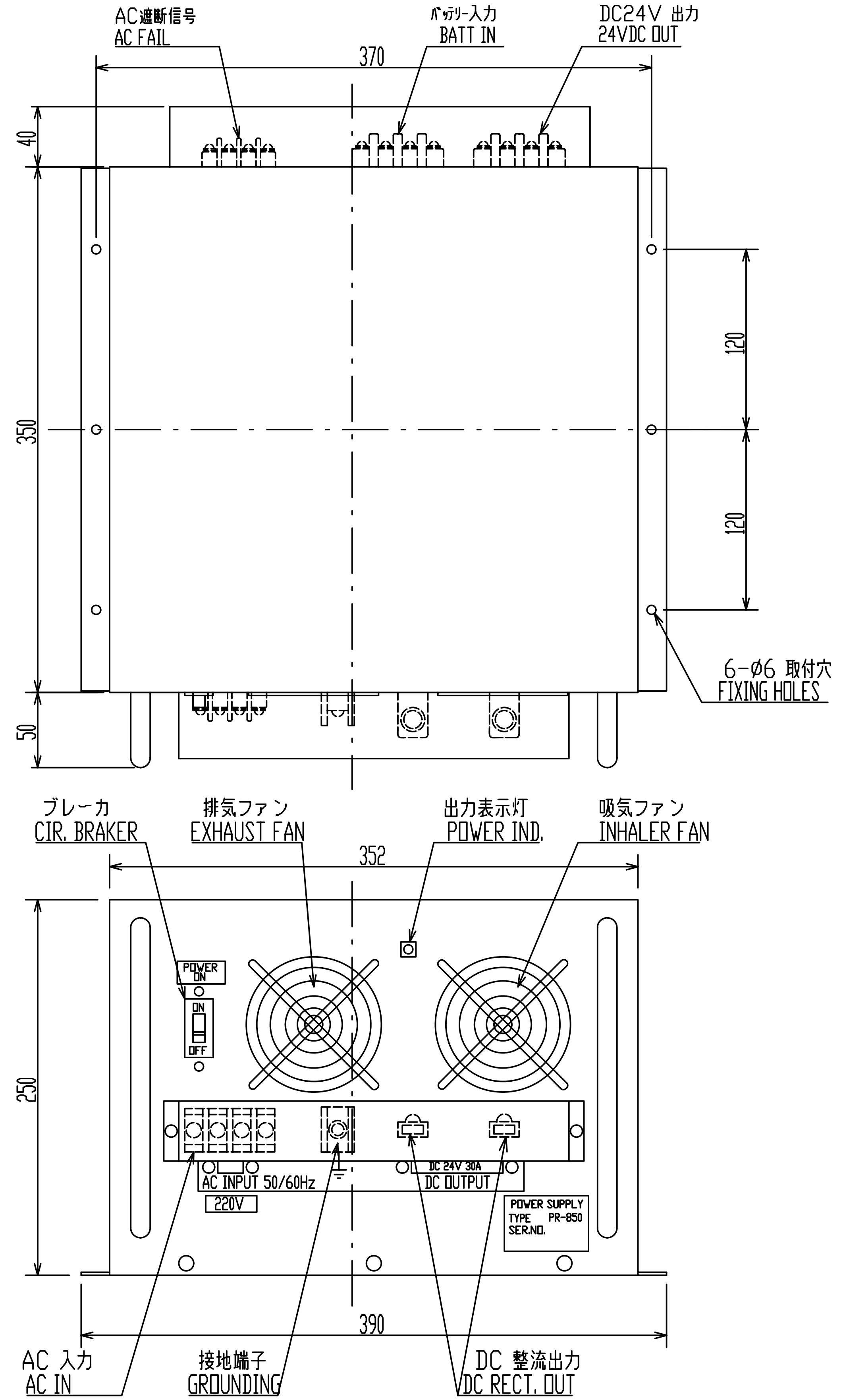

DRAWN	Nov. 25, '06 E. MIYOSHI		TITLE	PR-850A
CHECKED	TAKAHASHI.T		名称	AC-DC電源ユニット 外寸図
APPROVED	Y. Hatai			
SCALE 1/4	MASS 35 ±10% kg		NAME	AC-DC POWER SUPPLY UNIT OUTLINE DRAWING
DWG.No.	C5519-G11-G	REF.No.		

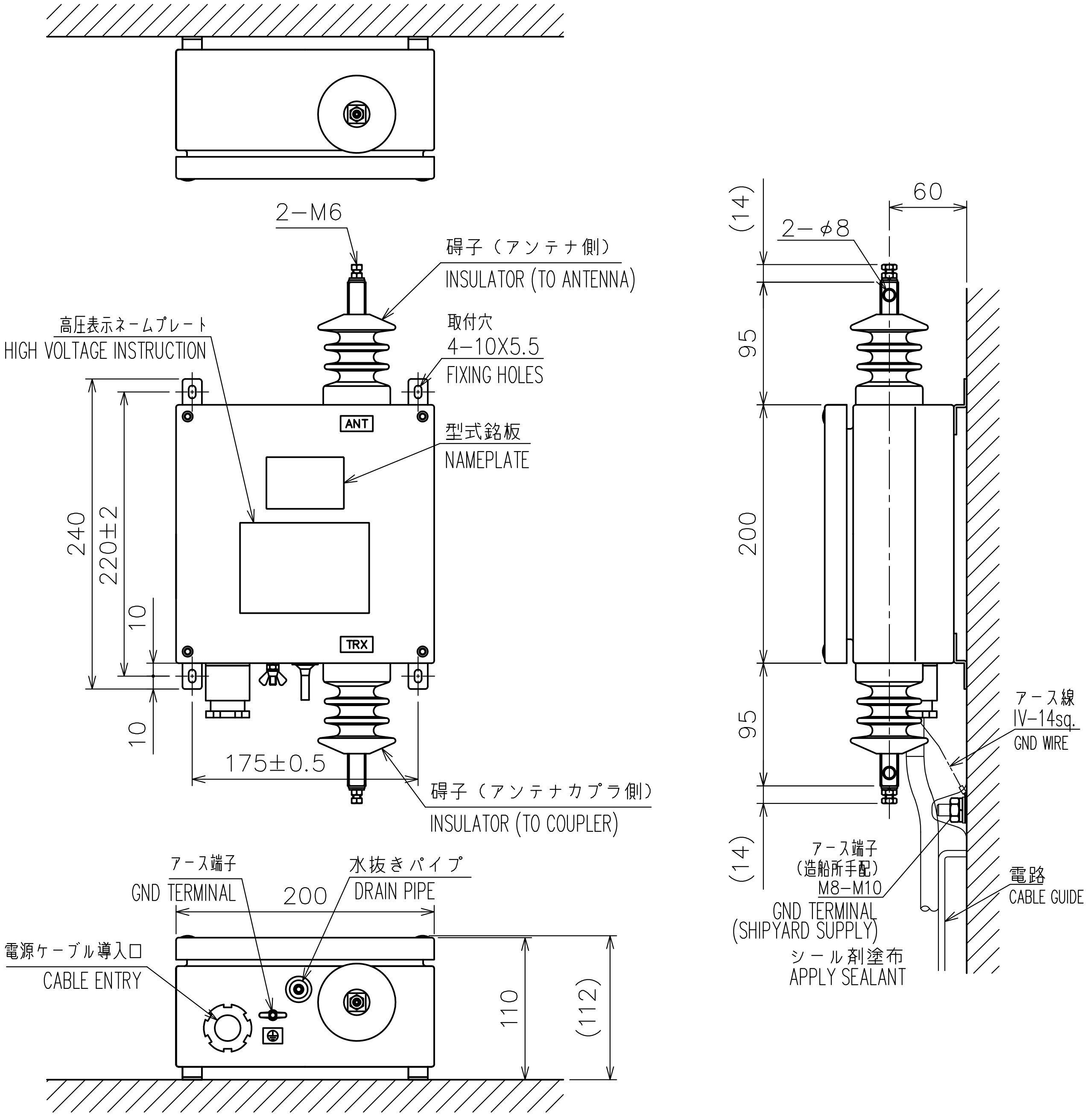

注　記

1）　指定外の寸法公差は表１による。

2）　アンテナ及びアンテナカプラに繋げる線については十分な空間を確保すること。

3）　取付用ネジはトラスタッピンネジ 呼び径５×２０を使用のこと。

NOTE

1. TABLE 1 INDICATES TOLERANCE OF DIMENSIONS WHICH IS NOT SPECIFIED.
2. KEEP SUFFICIENT CLEARANCE TO CONNECT THE WIRES TO ANTENNA AND COUPLER.
3. USE TAPPING SCREWS ø5x20 FOR FIXING THE UNIT.

表 1　TABLE 1

寸法区分（mm）DIMENSION	公差（mm）TOLERANCE
L≦50	±1.5
50<L≦100	±2.5
100<L≦500	±3

DRAWN 11/Sep/09 T.YAMASAKI		TITLE	AS-102
CHECKED 11/Sep/09 T.TAKENO		名称	自動アンテナ切換器
APPROVED 25/Sep/09 R.Esumi	FS-1570/2570/5070		外寸図
SCALE 1/5	MASS 3.2 ±10% kg	NAME	ANTENNA SWITCH
DWG. No. C5656-G04- A	REF. No. 05-094-400G-1		OUTLINE DRAWING

FURUNO ELECTRIC CO., LTD.

FURUNO

S-1

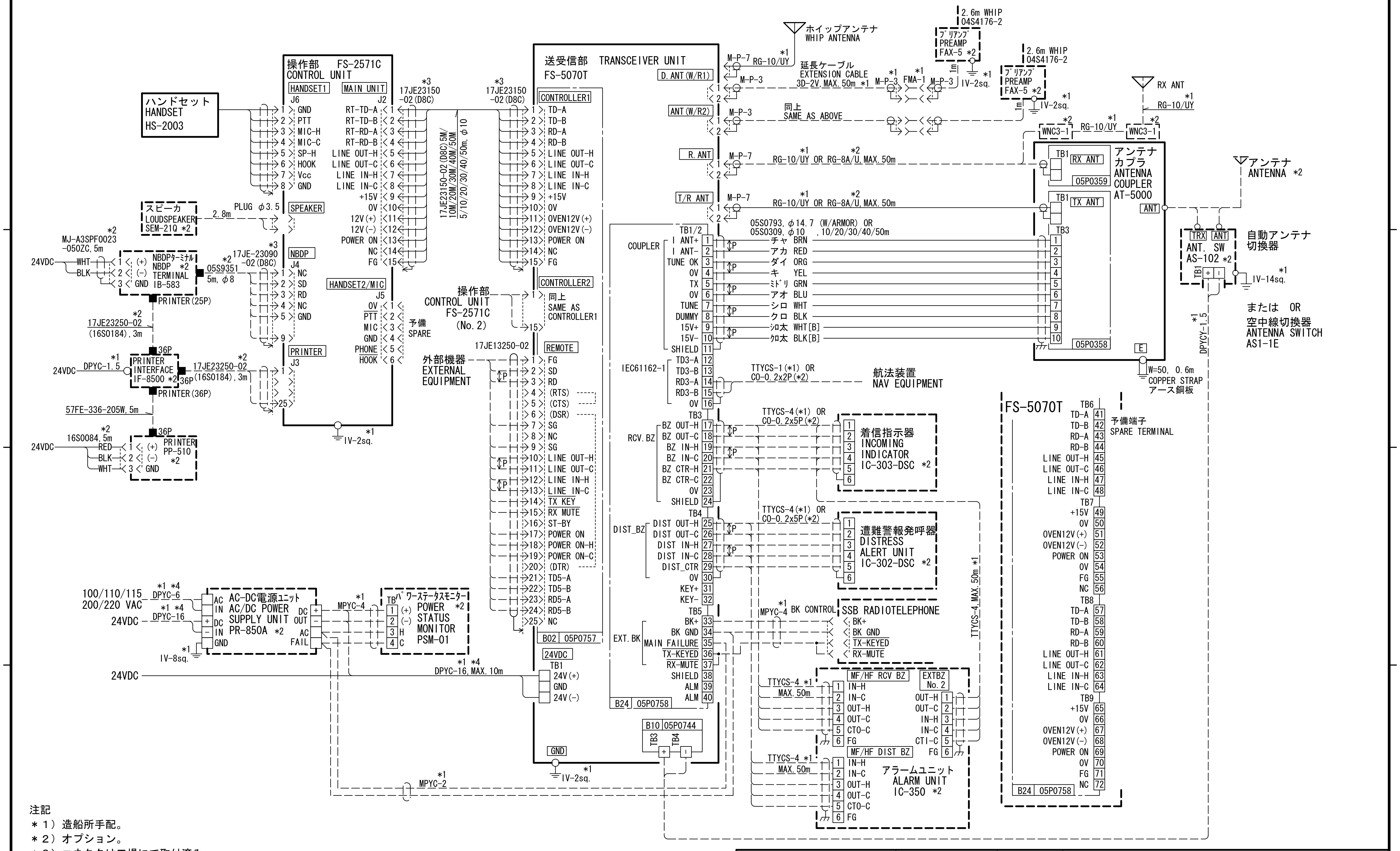

注記
＊１）造船所手配。
＊２）オプション。
＊３）コネクタは工場にて取付済み。
＊４）長さに応じて芯線太さを変更する。

NOTE
*1. SHIPYARD SUPPLY.
*2. OPTION.
*3. CONNECTOR PLUGS FITTED AT FACTORY.
*4. CHANGE THICKNESS ACCORDING AS CABLE LENGTH.

CO-0.2x2P: CO-SPEVV-SB-C 0.2x2P, φ10.5
CO-0.2x5P: CO-SPEVV-SB-C 0.2x5P, φ13.5

DRAWN 16/Sep/09 T.YAMASAKI		TITLE	FS-5070
CHECKED 16/Sep/09 T.TAKENO		名称	SSB送受信機
APPROVED 25/Sep/09 R.Esumi			相互結線図
SCALE	MASS	NAME	SSB RADIOTELEPHONE
DWG.No. C5656-C01- F			INTERCONNECTION DIAGRAM

FURUNO ELECTRIC CO., LTD.